SERIES OF ICES SURVEY PROTOCOLS

SISP 7– BITS

Manual for the Baltic International Trawl Surveys (BITS)

March 2014

Baltic International Fish Survey Working Group

ICES CIEM
International Council for the Exploration of the Sea
Conseil International pour l'Exploration de la Mer

International Council for the Exploration of the Sea
Conseil International pour l'Exploration de la Mer

H. C. Andersens Boulevard 44–46
DK-1553 Copenhagen V
Denmark
Telephone (+45) 33 38 67 00
Telefax (+45) 33 93 42 15
www.ices.dk
info@ices.dk

Recommended format for purposes of citation:

ICES. 2014. Manual for the Baltic International Trawl Surveys (BITS). Series of ICES Survey Protocols SISP 7 - BITS. 71 pp.

http://doi.org/10.17895/ice.pub/7580

ISBN 978-87-7482-153-3

ISSN 2304-6252

Contents

1 Introduction

First young fish trawl surveys in the Baltic Sea were carried out by Poland in 1962 (Netzel, 1974). Most of the Baltic countries also developed national trawl surveys during subsequent years. However, it was difficult to combine the results of these national surveys because the fishing gears, the realization of fishing hauls and the survey periods varied.

The first attempts to coordinate national surveys of the Baltic young fish were made in 1985 (ICES, 1985), and they were continued with varying intensity in subsequent years and, several attempts were made to determine the conversion factors among different fishing gears (Schulz and Grygiel, 1984, 1987; ICES, 1987; Oeberst and Frieß, 1994; Oeberst and Grygiel, 2004). A robust method for compiling trawl survey data used in the assessment of cod inhabiting in the central Baltic Sea was developed by Sparholt and Tomkiewicz (2000). Authors applied generalized linear models to calculate the "fishing power" of national bottom-trawls. The "fishing power" factors are used to transform the national catch per unit of effort into cpue-values of the former standard GOV trawl.

A further attempt to establish internationally coordinated trawl surveys in the Baltic Sea was made in 1995 (ICES, 1995). The first meeting of the ICES Working Group on Baltic International Fish Survey (ICES, 1996) considered the design of trawl surveys for cod assessment and started the development of bottom-trawl manual. The EU Study Project No. 98/099 (Anon, 2001a) provided funding for the development of new standard fishing gears (type TV3#520 and TV3#930). From autumn 1999, a number of fishery laboratories of the Baltic countries conducted inter-calibration experiments between national and new standard gear (ICES 2001a, 2003) and conversion factors between the new standard and the national gears were estimated (Anon, 2001a; ICES, 2002; Oeberst and Grygiel, 2002, 2004; Lewy *et al.*, 2004).

New coordinated survey design was established in 2001 (ICES, 2001). Stratified random trawl surveys use the ICES Subdivisions and their depth layers as strata to reflect the variability of the distribution pattern of target species. Besides the traditional survey in spring (15 February – 31 March) additional coordinated survey has been conducted in November since 2001. Different step for improving the survey design were realized between the different meetings of the WGBIFS. Because it was necessary that vessels work in areas where own experiences did not exist. The tow Database was established in 2001 and was improved based on the feedbacks from the realized surveys (Anon. 2001b). This Tow Database contains positions where demersal trawls can be realized with the standard gears in the Baltic Sea. The different steps for planning and realizing the surveys and for estimating stock indices were documented in the reports and in the Manual of the Baltic International Trawl Survey (BITS).

Eight countries have been participating in BITS survey: Denmark, Germany, Poland, Sweden, Latvia, Lithuania, Estonia and Russia.

2 The fishing method

2.1 Main target species

The international coordinated trawl surveys are directed to the demersal species i.e. cod and flounder and other flatfish in the Baltic Sea, however in the recent two years other species are also intensively investigated to support ecosystem analyses. Baltic Sea with the ICES Subdivisions and rectangle codes are given in the Annex 1. Annex 2 presents the assignment of quarter of rectangles to the ICES Subdivisions. Annex 12 presents the list of fish species relatively frequently recorded in the research control catches, and which are used in the DATRAS (the Database of Trawl Surveys) checking program.

The main aim of the BITS ground-trawl survey, conducted twice per year, i.e. in February-March and November-December is monitoring of the spatial distribution and abundance of cod, flounder, sprat and herring recruiting year-classes, and other less numerous fish species spatial distribution in a bottom zone of particular the ICES Subdivisions (the Baltic Sea), taking into consideration the principal hydrological parameters vertical and horizontal variations. Moreover, the survey is focused on evaluation of the fishing efficiency (catch per unit of effort; cpue), and analysis of the Baltic ichthyofauna biodiversity as well as on sampling materials for the main species principal biological parameters of main fish species.

2.2 Survey periods

National parts of the international coordinated fish surveys should be carried out in the first quarter between 15 February and 31 March (spring survey) and in the fourth quarter between 1 and 30 November (autumn survey).

2.3 Survey area and stratification of the Baltic Sea

The total distribution area of cod should be covered by the BITS trawl survey. It was agreed by the responsible ICES WGBIFS that the ICES Subdivisions 22–28 should be covered with fish control-hauls during the trawl surveys because the stock size of the eastern Baltic cod is relatively low and is currently concentrated in the ICES Subdivisions 25–26. Expansion of the area under investigation in northern areas of the Baltic Sea (ICES Subdivisions 29–32) is possible dependent on the development of the eastern Baltic cod stock size and its spatial distribution pattern.

The international trawl surveys are carried out in form of a stratified random survey. The ICES Subdivisions and depth layers within an ICES Subdivision are used as strata. Only depth layers from 10 to 120 m depending on the ICES Subdivision are covered by the surveys. The areas aggregated on 10-m depth layers per the ICES rectangle are given in Annex 3. Following strata are used:

ICES Subdivision	Strata
22	10 – 39 m
23	10 – 39 m
24	10 – 39m, 40 – 59 m
25	20 – 39 m, 40 – 59 m, 60 – 79 m, 80 – 99 m
26	20 – 39 m, 40 – 59 m, 60 – 79 m, 80 – 99 m, 100 – 120 m
27	20 – 39 m, 40 – 59 m, 60 – 79 m, 80 – 99 m, 100 – 120 m
28	20 – 39 m, 40 – 59 m, 60 – 79 m, 80 – 99 m

2.4 Fishing gears

The TV-3 bottom trawl must be used as standard fishing gear during the BITS surveys in the Baltic Sea. Two types of the TV-3 trawl were developed for different sizes of research vessels, one small of 520 meshes (TVS) and one large of 930 meshes (TVL) in circumference. The description and use of the trawls are given in Annexes 4 and 5, respectively. These trawls have been used since 2001. The small standard trawl type TV-3#520 should be used for vessels with engine less than 600 KW and the larger standard trawl type TV-3#930 for vessels with engine more than 600 KW.

Small adaptation of large TV-3 was carried out by Denmark, which added a stone panel to reduce the danger of trawl damage by large stones.

It was agreed by WGBIFS that the Denmark and Germany realize all hauls in the ICES Subdivisions 22–24 in order to reduce the effects of the conversion factors between the small and large version of the new standard trawls. Vessels of both countries (RV "Havfisken" and RV "Solea") use the small version of the standard trawl. The large version of the standard trawl is used by Denmark (RV "Dana"), Poland, Russia, Latvia (RV "Baltica") and Sweden in the ICES Subdivisions 22–28. During the Latvia surveys on rented Polish RV "Baltica" large TVL with rock-hopper is used due to the very hard bottom in Latvian economical zone. The ICES Subdivision 28 and small part of the ICES Subdivision 26 are covered by Latvia (commercial Latvian vessel); the small version of TV-3 is used. The ICES Subdivision 28 and small part of the ICES Subdivision 29 are covered by Estonia (commercial Estonian vessel) , the small version of TV-3 is used. The small part of the ICES Subdivision 26 is covered by Lithuania; the small version of TV-3 is used. Actual information according ships and gears used by countries during BITS surveys are included in DATRAS database.

Quality control

During use, the trawls shall be checked at regular intervals by taking a number of check measurements on the geometry of the trawl. The intervals and a list of check measurements are given in the detailed trawl specifications in the Annexes 4 and 5.

2.5 Fishing operation

Hauls shall be performed using a standard towing speed of 3 knots. The speed should be measured as the speed over the ground.

The duration of the standard haul is 30 minutes (for the DATRAS Database each single catch should be normalized to catch per 1 hour).

The start of the haul is defined as the moment from which the trawl geometry (vertical and horizontal) is stabilized. The end of the haul is defined as the moment of the beginning of warp hauling.

After the complete shooting of the warps and the braking of the winches a relatively high speed (5–6 knots) will be maintained for around 1 minute to allow the trawl to well draw both in length and in width.

The speed will then be strongly reduced (even to 0) to allow the doors reaching the ground. Once the doors are on the ground a speed lower than the normal one (2.5–2.7 knots) should be maintained to allow the trawl to get down to the ground.

Once the net is well stabilized the speed will be increased towards the standard speed (3 knots); this moment is defined as the real start of the haul.

For the vessels using a trawl monitoring devices like SCANMAR the trawl can be considered as well stabilized as soon as its vertical opening is between 2 and 3 m.

For the vessels without such a device, preliminary trials should be performed before the survey. These trials will determine, ship by ship, the time needed to correctly operate the trawl, taking the depth and the working practice of each skipper into account.

It is important that the gear stay in good contact with the ground during the whole haul. This point should be checked regularly either by acoustic device during the haul, by the observation of the chains wear or by the observation of benthic organisms in the catches after the haul.

Trawling shall only take place during daylight, defined as the time between 15 minutes after sunrise until 15 minutes before sunset.

Quality control

The horizontal distance between the upper wing-ends must be monitored if possible during the whole tow. The following table gives the limits of the wing-end distance and the corresponding height of the trawl at the centre of the headline.

Trawl measurements at 3 knots in metres	Distance between upper wing-ends	Approximate corresponding height at centre of headline
TV-3, #520 meshes	13.5 – 14.5	2.2 – 2.5
TV-3, #930 meshes	26 – 27	5.5 – 6.5

2.6 Allocation of trawl stations

The aim of the trawl surveys is to cover the main distribution area of the target species - cod and flounder. For allocating the planned stations to the different strata the size and spatial distribution pattern of cod are used. Besides the size of both Baltic cod stocks, the actual hydrographical conditions may influence the spatial distribution of the target species. These aspects should be considered during the process of allocation of hauls to the different strata. However, the relationship between the hydrographical parameters and the cod distribution cannot be accurately described at this date. Furthermore, the hydrographical conditions during the surveys cannot be predicted. Therefore, it was agreed that the number of planned stations should be distributed dependent on the size of the areas of the ICES Subdivisions and using depth range from 10 to 120 m. The significant decrease of the eastern Baltic cod stock in the period 1985–1990 suggests that the trawl stations should be also allocated according to the distribution and density pattern of the cod stocks. It was agreed during the WGBIFS meeting in February 2001 that a running 5 years mean of the cpue derived from the BITS survey in spring should be used for describing the distribution of cod.

The factors - area of the ICES Subdivision, and distribution pattern of cod - are used with different weights. A weighting factor of 0.6 was defined for area, and a weighting factor of 0.4 was defined for mean distribution of cod (running 5 years mean). The running mean of the cod (age-group 1+) cpue should be adapted every year based on the results of spring surveys. The same weights were used for the parameters - area and running mean of the distribution patter - for allocating the number of stations in all the depth layers for the different ICES Subdivisions. The areas by rectangle, in nm^2 of 10 m depth layers are given in Annex 3.

In the first step, the numbers of planned stations of all participating countries are summarized for the western Baltic region (ICES Subdivisions 22–24) and for the eastern region (ICES Subdivisions 25–28). Then the total number of planned trawl stations is allocated to subdivisions according to the area and the 5 years running mean as mentioned above for each region. The number of planned stations of each the ICES Subdivision is then allocated to the depth layers.

2.7 Fishing positions

The new survey design which was introduced in 2001 requires that vessels work in areas where they have not experience with the bottom types and possible dangers for the trawls like rocky bottom, wrecks etc. Furthermore, large areas are closed for fishing activities in the Baltic Sea as a result of munitions, electrical cables, gas pipelines, dense ships traffic etc. Therefore, the Tow Database was established. This database contains all positions where demersal trawls can be successfully realized with the different versions of the standard gear. The feedbacks from the surveys of the last years were used to update and improve the quality of the Tow Database. Unfortunately, the available haul positions are heterogeneously distributed in many depth layers. Therefore, it is not possible to use a generator of equally distributed random numbers to select hauls from the Tow Database for a planned survey because such algorithm produces a biased selection as a result of different probability of areas to come into the selected pool of hauls (ICES, 2002, 2003). Method for selecting hauls from the Tow Database was proposed in 2003 (Oeberst, 2003). The working group WGBIFS stated in 2004 (ICES, 2004) that the proposed method is suitable to solve the problem of heterogeneity of hauls which are available in the Tow Database. The analyses have revealed that the use of a unit size of 10′N x 20′E is the best compromise for the trawl surveys in the Baltic Sea if it is taken into account that the same unit size should be used for selecting hauls in depth layers of all ICES Subdivisions. The first step of selection haul position from the Tow Database for a given depth layer of an ICES Subdivision is a random selection of a unit within the same depth layers where a generator of equally distributed random numbers is used. Then one of the haul positions within the selected unit is randomly selected.

The selected hauls are assigned to the participating countries in such a way that the distance between the planned hauls is minimal as possible and that the national zones are covered if possible. When the selected stations cannot be realized as a result of wrecks, gillnets, navy military training or other reasons the hauls should be realized in the same depth layer as close as possible to the selected station.

Selected hauls should be omitted in the case when the results of at least two stations in the same depth layers have revealed that fish not appeared in the zone which was covered by the net opening and when hydrographical observations have revealed that oxygen content is less than 1.5 ml/l in the layer of vertical net opening. However, it is necessary that datasets must be added to the DATRAS database with the haul position and the validity code “N” to avoid biased estimated of the stock indices in the depth layer.

2.8 Tow Database

The use and the reworking of the Tow Database have demonstrated that changes of the structure can improve the handling of the database and can make the structure more understandable. Therefore, the structure of the Tow Databases was partly changed until 2005. The structure is given in the subsequent table.

The first column contains the notation of the survey where the station was used the last time. The haul number (HrHaul) summarizes two parts. The first two digits present the number of the ICES Subdivision. The following three digits present the number of haul in given the ICES Subdivisions. The two next columns contain the notation of the rectangles and of the ICES Subdivision. Then follows the latitude of the first position is stored in two columns (degree and minutes separately) followed by the longitude of the first position (degree and minutes separately). This structure is used for all possible ten positions of the hauls. Then the depth data are given. The first value pre-sets the mean depth of the haul in metre. This value is used for the assignment of the haul to the depth stratum. Then up to ten depth data in metre can be stored. The column "source" informs wherefrom the data were made available. The column "TV3" is used to store the countries, which have already realized the stations. These data are used for assigning the selected stations to one of the participating countries. The next column informs whether a standard groundrope can be used (1) or the rock-hopper equipment (2) must be used. Then the main direction of the haul (zero – main direction from west to east) and the distance between the first and last position of the haul in nm follow.

Column	Structure of Tow Database - valid since autumn 2004			
A	Last realization			Q404
B		NrHaul		28002
C		Rectangle		42H0
D		ICES SD		28
E	1. position	Latitude	Degree	56
F			Minutes	36.5
G		Longitude	Degree	20
H			Minutes	41.3
I	2. position	Latitude	Degree	56
J			Minutes	36.9
K		Longitude	Degree	20
L			Minutes	41.9
M	3. position	Latitude	Degree	56
N			Minutes	37.2
O		Longitude	Degree	20
P			Minutes	42.6
Q	4. position	Latitude	Degree	56
R			Minutes	37.6
S		Longitude	Degree	20
T			Minutes	43.2
U	5. position	Latitude	Degree	0
V			Minutes	0
W		Longitude	Degree	0
X			Minutes	0
Y	6. position	Latitude	Degree	0
Z			Minutes	0
AA		Longitude	Degree	0
AB			Minutes	0
AC	7. position	Latitude	Degree	0
AD			Minutes	0
AE		Longitude	Degree	0
AF			Minutes	0
AH	8. position	Latitude	Degree	0

Column	Structure of Tow Database - valid since autumn 2004			
AI			Minutes	0
AJ		Longitude	Degree	0
AK			Minutes	0
AL	9. position	Latitude	Degree	0
AM			Minutes	0
AN		Longitude	Degree	0
AO			Minutes	0
AP	10. position	Latitude	Degree	0
AQ			Minutes	0
AR		Longitude	Degree	0
AS			Minutes	0
AT				
AU		Mean depth	Metre	38
AV	1. position	Depth	Metre	0
AW	2. position	Depth	Metre	0
AX				0
AY				0
AZ				0
BA				0
BB				0
BC				0
BD				0
BE	10. position		Metre	0
BF		Source	Latvia	
BG		TV3		L
BH		Ground	rope	1
BI		Direction		0

3 Sampling of trawl catches

The following guidelines are to be used for each haul during the survey. All forms should be filled in using a pencil in order to allow correcting and stay waterproof if not using electronic registration. The working up of the catch can be seen as a number of processes succeeding each other.

3.1 Estimating the total mass (weight) of the catch

Purpose

Measurement or estimation of the total mass of the fish and "other" caught in the given haul.

Methods

The total catch mass (weight) of haul can be estimated by one of the following methods.

3.1.1 – Weighing the total catch by use of a sea compensated balance.
3.1.2 – Counting the number of standard filled baskets/boxes. The average weight of the baskets/boxes is estimated by weighing at least five random selected baskets/boxes.
3.1.3 – By adding up the total estimated mass or weighed mass of each species (will often be achieved during an estimation of the species composition).

The results are recorded in kilograms.

3.2 Estimating of the catch by species

Purpose

Measurement or estimation of the total mass (weight) and number of specimens of given species in catch.

Methods

Total catch should be sorted out by species, storing different species separately in boxes or baskets for further analyses. In order to simplify further working up of the catch, only boxes or baskets of same size and material should be used.

Certain species that are hard to distinguish from each another may be grouped by genus or higher taxonomic units.

In cases of exceptionally large catches (e.g. over 500 kg) or other circumstances which do not allow the sorting of total catch, the species composition should be estimated using subsampling.

The procedure for subsampling is one of the following depending on the circumstances:

3.2.1 – If all species appear fairly frequently in the catch, simultaneous subsampling of all species in the whole catch should be used:

3.2.1.1 – Three subsamples each weighing app. 100 kg's, depending of the impression of the species included in the catch are sorted by species. The samples must be taken from the first, middle and last sections of the trawl codend. Be aware of, that the three subsamples together should represent the whole catch.

3.2.1.2 – Each species from the three subsamples are pooled and each species are weighed separately. The weights are recorded.

3.2.1.3 – The total mass (weight) of all species (c) in the three subsamples is estimated by adding the weight of the three samples.

3.2.1.4 – The total catch mass (weight) of each species is estimated by raising the subsample mass for a given species with the ratio between the total catch weight and the summed mass of all subsamples.

3.2.1.5 – All total and subsample masses (weights) are recorded.

3.2.2 – If some species appears in very small numbers in the catch, although other species appears in large numbers, subsampling of only the frequent species in the catch may be applied.

3.2.2.1 – The species appearing with low frequency are sorted out of the whole catch by species and weighed.

3.2.2.2 – The rest of the catch is treated as specified in method 1.

3.2.2.3 – All total and subsample masses (weights) are recorded on the species-form.

Non-fish species should be recorded as well. This group might be grouped and recorded as invertebrates, botanicals or just "Other1". Non-organic material (stones, barrels etc.) should be recorded as "Other2".

The sorted and weighed fish are then used for the following **length, age, sex and maturity sampling**.

3.3 Length composition

Purpose

Measurement or estimation of the absolute or relative length frequency by species.

Methods

Length distribution should be recorded at least for main species like cod, herring, sprat and flatfish however, is strongly recommended to perform the length measurement for all detected species, and transfer the data to the ICES DATRAS database.

If the number of a given species does not significantly exceed the number recommended in the table below all individuals are measured.

If the number of individuals of a given species significantly exceed the number recommended in the table below the following procedure must be adapted:

3.3.1 – All individuals of a given species in the catch are subdivided into a number of subsamples. Each subsample should approximately have the size, which is recommended in the table below.

3.3.2 – One of the subsamples is randomly selected for length measurements.

Always measure the whole subsample. Never stop in the middle because you have realized that your subsample is too large. In most cases, a biased length distribution will be the result.

If you realize that, your subsample is too small then randomly selects another of the subsample and continue obtaining the length frequency measuring all of it. If you

must, divide this subsample into a number of sub-subsamples and continue the measuring procedure by measuring one or more randomly selected sub-subsamples completely).

Length of the fish is defined as total length (measured from the tip of the nose to the tip of caudal fin).

Length is measured to 0.5 cm below for herring and sprat (e.g. lengths in the range of 10.0–10.4 cm are equal to 10.0 cm class and lengths 10.5–10.9 cm is equal to 10.5 cm class). For all other species the length is measured to 1 cm below, (e.g. lengths in the range of 20.0–20.9 cm are equal to 20.0 cm class).

If a certain species is caught in two clearly distinct size categories, both of these size categories should be sampled separately. The number of fish from each sample should follow the sample sizes given below.

Minimum number of individuals to be length measured (in sample or subsample):

Number of length-classes	Number of individuals
1 – 10	100
11 – 20	200
more then 20	300

The relation between number of length-classes of the total length range and the number of individuals to be measured is illustrated in Figure 3.3.1 (Müller, 1996).

During the length measurements, the number of fish of each species per length group, as specified either in the table above or Figure 3.3.1, are collected and stored separately by the length-groups for age, sex, individual mass and maturity estimations

To improve the data of flounder, plaice, turbot, dab and brill, sex separated length distribution and maturity information are needed. Therefore, it is recommended that this be done on the BITS survey. Each country should obtain at least 20 specimens per length class per ICES Subdivision, per survey. However, the standard biological analysis can be carried out for each sex for the same purpose.

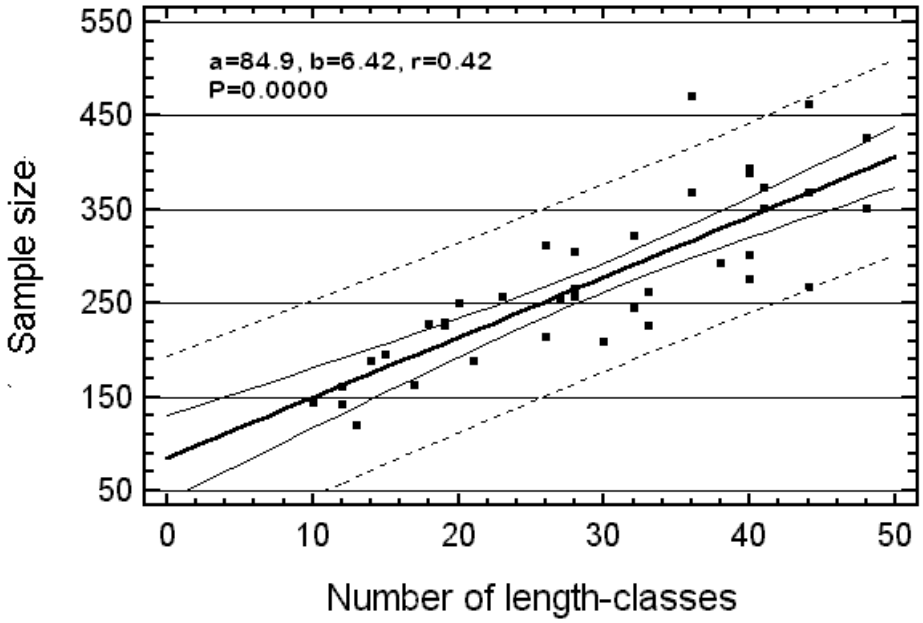

Figure 3.3.1. Relationship between the number to be measured and the number of length groups of the total length range in the sample of the catch (after Müller, 1996).

3.4 Age, sex, individual mass (weight) and maturity sampling procedure

Purpose:

Estimation of the fractions of age-groups, sex ration, mass and fractions of the different maturity stages by length-class and species.

Age, sex, mass and maturity estimates are at least required for the main target species:

- cod
- flounder

However, the same data should be sampled for herring, sprat and flatfish only when capacities are available.

The complete number of age determinations is used to establish age–length-keys (ALK) by the ICES Subdivision and quarter. ALKs are used for converting the length distribution of given aggregation level into an age distribution. The determination of sex and maturity stage is done to produce maturity ogives for estimating the Spawning-stock biomass (SSB). The individual mass is used for calculating the mean mass per length class, to convert catch in weight into catch in numbers and the mean mass of age-groups for calculating the SSB and total biomass. Apart from the mentioned purposes, there might be additional purposes (identifying stock components etc.).

If one country realizes less than 5% of the total number of hauls made by all countries in an ICES Subdivision then collection of fish age samples is not necessary.

Methods

The fish samples are collected based on country, quarter and the ICES Subdivision stratification.

It is recommended that each country collect otoliths by each haul to make safe that sampled otoliths come from all parts of the ICES Subdivision.

The procedure of re-measuring the fish, weighing, estimating of sex, maturity stage and the cutting of otoliths might be made most efficient at one work-procedure for each individual in the above-mentioned sequence.

Consequently, the number of fish selected for estimating of sex, maturity stage and cutting of otoliths are equal.

It is recommended sampling flounder regularly for sex, maturity, age and length and applying the slicing and staining or the burning and breaking methods to determine the age. Reading whole otoliths is not considered as appropriate.

Estimating individual/mean mass (weight)

After length measuring the individual mass of each fish is weighed and recorded. If it is impossible to achieve the individual weight, the number and total mass of group of individuals with the same length are recorded to calculate the mean mass of the individuals in the length class. The mass (weight) is estimated by use of an electronic balance. The mass (weight) is measured in grams. A minimum of five specimens must be weighed although less is used for cutting of otoliths.

Estimation of sex and maturity stage

The abdomen of each individual is cut open and the gonads are examined in order to estimate the sex. If the individual is mature, the sexes can easily be distinguished, but for immature individuals the task is difficult and special literature about the subject have to consult.

In the same process, the maturity stage is determined according to the classification description of the different stages given in Annex 6 or according to the code practised on the national level. If a national code is used the national coding must be converted into the BITS 5 stage code according to Annex 7 before the data are submitted to ICES Data Centre. If a common reference collection of maturity is established, this should be used.

Cutting of otoliths

The technique for cutting otoliths depends on the species. For descriptions of these techniques, please consult the literature about the subject.

The optimum number of otoliths per length class and the ICES Subdivision cannot be given in a universal form. A description of the optimum sample size of age readings and length measurements dependent on a universal cost function is given paper prepared in Oeberst (2000).

The analyses showed that the necessary number age readings in a length class depend on:

- the portion of the length class within the length frequency,
- the maximum variance of the portions of the age-groups within the length class.

The table below gives the minimum number of otoliths by length class, which must be cut per country, survey, the ICES Subdivision and species based on the length distribution.

LENGTH-CLASS	MINIMUM NUMBER OF AGE READINGS
With probably only one age-group (age-group 0, 1)	2 to 5
With probably more than on age-group	
Portion of the length class less than 5%	10
Portion of the length class more than 5%	20

Because the collection of the otoliths should be distributed over the whole survey time in the ICES Subdivision, the actual length frequency of the survey can be used to choose the number of otoliths per length-class. If this is not possible, the length frequency from the last 1 to 3 surveys in the same Subdivision and quarter should be used.

The otoliths may be:

- read during the survey, if proper facilities and experienced age readers are available on board; store the otoliths in ice-boxes, envelopes or other suitable containers,
- stored for later age determination.

In both cases, the containers must be labelled with indication of: species, cruise number, date, ICES Subdivision, length class.

4 Environmental data

Purpose

Measurements of environmental parameters, which might influence the temporal and spatial distribution of the different species.

Methods

As minimum following hydrographical data should be collected at each station:

- seawater temperature and salinity in the surface layer,
- seawater temperature, salinity and oxygen content in the bottom layer.

The sampling procedure of the hydrographical data should be implemented according to the standards specified by the ICES. If possible, the CTD profiles from the surface to the bottom should be sampled. These data should be delivered to the ICES oceanographers.

5 Estimation of stock indices

5.1 Stock indices

Following notations are used for describing the algorithms.

$c_{l,h,s,t}$ denotes the catch per hour of species with length l, in haul h of strata s captured with trawl type t. The number of trawl stations in strata s is denoted by n_s, and A_s denotes the area of strata s.

To combine the cpue values of both the new standard gears conversion factors were estimated based on inter-calibration experiments (literature). The conversion factors ($conf_t$) are used to transform the cpue values of trawl type t in standard cpue's which are expressed in units of the larger TV-3.

$$C_{l,h,s} = c_{l,h,s,t} * conf_t$$

Different ways are possible the aggregate the data of the hauls in stock indices by age-group and the ICES Subdivision. One option is that $C_{l,h,s}$ are transformed in cpue by age-group for each haul $C_{a,h,s}$. where a denotes age-group. Then the means by depth layers and the ICES Subdivision are estimated. Second way which is described here estimates the means by depth layer and the ICES Subdivision by length classes. The mean length frequency of the stock in the subdivision is then transformed in stock indices by age-groups. Both ways estimates the same stock indices.

Using the $C_{l,h,s}$ the mean standardized cpue of species with length l in strata based on ns hauls by depth layers is estimated.

$$\overline{C}_{l,s} = \frac{1}{n_s}\sum_{k=1}^{n_s} C_{l,k,s}$$

The stratified mean of the ICES Subdivision by length class ($\hat{C}_{st,l}$) uses the areas of the strata (depth layer) as weighting factors and can be calculated by:

$$\hat{C}_{st,l} = \frac{1}{\sum_s A_s}\sum_s A_s \overline{C}_{l,s}\,.$$

$\hat{C}_{st,l}$ presents the length distribution of the stock in the ICES Subdivision.

The variance (V) of $\hat{C}_{st,l}$ can be estimated by:

$$V(\hat{C}_{st,l}) = \frac{1}{(\sum_s A_s)^2}\sum_s A_s^2 V(\overline{C}_{l,s})/n_s$$

where $V(\overline{C}_{l,s})$ presents the variance of the cpue values by length interval in strata s.

The mean length frequency in the ICES Subdivision can then be transformed in cpue vales by age-group using the data of ALK key.

X_{la} may be the number of aged individuals with length l and age a and

$X_{l.} = \sum_a X_{ja}$ denotes the total number of individuals aged in length class l.

Proportion of age-group a in the stock can be estimated by

$$p_a = \sum_l \frac{\hat{C}_{st,l}}{\sum_l \hat{C}_{st,l}} \frac{X_{la}}{\sum_j X_{la}}$$

Stock index of age-group a, C_a, is estimated by

$$C_a = p_a \sum_l \hat{C}_{st,l}$$

5.2 Weight at age

Weight of individuals, which is stored in CA data, are used to estimate mean weight-at-age where weight samples are stratified by length class. Mean weights per length class must be used for converting the length distribution of the cpue on a given aggregation level, X, (as depth layer or ICES Subdivision) into mean weight-at-age (ICES, 2002).

$\overline{W}_{l,a}$ donates the mean weight of individuals in length class l with age a based on CA data of the used aggregation level. Missing mean weights of length class where $\overline{C}_{X,l}$ exist are substituted by the length-weight relationship of the corresponding data.

$$W = kL^b$$

where k and b denote the parameter of the length-weight relationship.

Mean weight-at-age, $\overline{W}_a$, of the aggregation level is calculated by

$$\overline{W}_a = \frac{\sum_l \overline{W}_{a,l} * \overline{C}_{X,l}}{\sum_l \overline{C}_{X,l}}$$

Criteria for calculating mean weight-at-age:

__No missing age values
__No missing weight values
__Both valid and invalid data

Selections:

__Year
__Survey
__Aggregation level (depth layer or subdivision)
__Species

5.3 Maturity-at-age

The maturity ogive is calculated as the fraction of mature fish at age-group a chosen aggregation level, X, (depth layer or ICES Subdivision). Mean fraction of matured fish per length class must be used for converting the length distribution of the cpue on a given aggregation level, X, (as depth layer or ICES Subdivision) into mean fraction of matured individuals at age (ICES, 2002).

In the DATRAS system, the maturity stages have the codes from 1 to 6, where 1 - is immature and 2 - resting, 3–5 are different stages of mature fish, 6 - fish with abnormal gonads development, e.g. as a result of diseases, atresia or intersexes. To create maturity ogive the codes 1 to 6 is transferred into a two aggregated codes – mature (M) and immature (I; Annex 6).

Currently, the information on fish maturity should be uploaded to DATRAS database according to the national scale, and next the ICES Data manager will convert these data to needed scale level, however the table with proposed conversion data should be delivered by particular countries.

$N_{M,l,a,s}$ denotes the number of matured individuals in length class l with age a and sex s and $N_{I,l,a,s}$ denotes the number of immature individuals in the same length class and age-group with the same sex.

The fraction of matured individuals by length class, age-group and sex can be estimated by

$$p_{M,l,a,s} = \frac{N_{M,l,a,s}}{N_{M,l,a,s} + N_{I,l,a,s}}$$

Missing $p_{M,l,a,s}$ of length class l is substituted by

$$p_{M,l,a,s} = (p_{M,l-1,a,s} + p_{M,l+1,a,s})/2$$

with

$p_{M,a,l,s}$ = 0.0 for total length smaller than 20 cm and

$p_{M,a,l,s}$ =0.95 for individuals larger than 60 cm or

$p_{M,a,l,s}$ of the nearest neighbour when more than one length-class are missing.

The fraction of matured age group a for a given aggregation level X, $p_{M,X,a,s}$ can be calculated by:

$$p_{M,X,a,s} = Ogive_{M,X,a,s} = \frac{\sum_l p_{M,X,l,a,s}\overline{C}_{X,l}}{\sum_l C_{X,l}}$$

Criteria for creating of maturity ogive:

__No missing age values
__No missing maturity values
__Both valid and invalid data

Selections:

__Year
__Survey
__Aggregation level (depth layer or subdivision)
__Species

6 Exchange specifications for the Baltic International Trawl Survey data

Data of BITS are used for estimating different stock indices and stock parameters for Baltic cod and flounder. For this purpose DATRAS system was developed which stores the sampled data, checks the data quality by screening tools and estimates different stock parameters. It was agreed by WG BIFS that participating countries submit all data in DATRAS exchange format to the ICES Secretariat in Copenhagen.

6.1 Deadlines of reporting

It was agreed that data should be submitted to the following deadlines:

Data	Deadlines
Preliminary data 1q (HL and CA records only for cod, flounder, herring, sprat)	Before WGBFAS in April
Final data 1q	1 June
Final data 4q	1 April

The option of submitting preliminary data of the first quarter survey was made available to support the assessment working group with newest data. In some cases, it is not possible to prepare final version of the data because the surveys finished late in March and the ICES assessment working group (WGBFAS) starts on the beginning of April. However, it is pointed out that final data should be available until the agreed deadline.

6.2 Screening of data

Before the data (in ASCII coding) are submitted to the ICES Secretariat, they should be checked by the screening program available from the ICES Secretariat. It can be found in the website (www.ices.dk/datacentre/datsu/selrep.asp). Checks, which are realized during the data screening, are given on the same website of the ICES. Furthermore, the CA data should be screened based on ICES and additional agreed tools, which are defined by WG BIFS.

6.3 Format of data

Three distinct types of computer records have been defined for standard storage of the DATRAS data:

HH: Record with detailed haul information

HL: Length frequency data

CA: Sex-maturity-age–length keys (SMALK's) for the ICES Subdivision.

The detailed formats of these three record types are given Sections 6.4.1–6.4.3 of the present manual. For the reference, codes please check ICES website www.vocab.ices.dk

Details of environmental data should be submitted to the Hydrographic Service of ICES according to established procedures. The national hydrographical station number should be reported in record type HH to allow the link to be made between haul data and environmental data.

6.4 File structure and name

When delivering the data to the ICES Secretariat one file should only contain data from one year and one survey. The name of the file should be contains month (the first day of the survey), country (ICES country code) and year, e.g. 03EST98.csv. Later corrections and updates are possible after that the data are uploaded.

The records must be ordered in such a way that each record of TYPE HH be followed by all records of TYPE HL of the same haul, ordered by species. The number and kind of species recorded must agree with the species recording code as specified in record TYPE HH. For examples of the various codes, see Annex V.

Records of TYPE CA should follow at the end of the file after the last species record of TYPE HL for the last haul.

6.4.1 Record type HH

Mandatory Record HH Haul Information, fields are separated by comma

Field	Start	Width	Mandatory	Key	Range	Comments ICES website	Example
RecordType	1	2	✓	char	HH	Fixed value: HH	HH
Quarter	2	1	✓	int	1 to 4		1
Country	3	3	✓	char	See Annex 8	TS_Country	GFR
Ship	4	4	✓	char	See Annex 8	TS_Ship	SOL
Gear	5	6	✓	char	See Annex 9	Gear	TVS
SweepLngt	6	3		int	0 to 999.0		-9
GearExp	7	2		char		TS_GearExp	S
DoorType	8	2		char		TS_DoorType	-9
StNo	9	6	✓	char		National coding system Coding system of Tow Database	22005
HaulNo	10	3	✓	int	1 to 999	Sequential numbering by cruise	1
Year	11	4	✓	char	1900 to 2099		2008
Month	12	2	✓	Int	1 to 12.0		11
Day	13	2	✓	Int	1 to 28/29/30 /31		12
TimeShot	14	4	✓✓	char	0001 to 2400	In UTC	0830
Stratum	15	4		char		TS_DepthStratum	-9
HaulDur	16	3	✓	int	0 to 90*)	In minutes	30
DayNight	17	2	✓	char	D, N	TS_DayNight (link tolNOAA website)	D
ShootLat	18	8	✓	decimal4	53.0000to 66.0000	Shooting latitude in decimal degrees	54.4248
ShootLong	19	9	✓	decimal4	9.0000 to 30.0000	Shooting longitude in decimal degrees	10.7238
HaulLat	20	8	✓	decimal4	53.0000 to 66.0000	Hauling latitude in decimal degrees	54.4052
HaulLong	21	9	✓	decimal4	9.0000 to 30.0000	Hauling longitude in decimal degrees	10.7532
StatRec	22	4		char	See annex 1		36G0
Depth	23	4	✓	int	5 to 300, -9	Depth from surface in metres, -9=not known	18
HaulVal	24	1	✓	char	I, V, N, C, A, M	Invalid =I, Valid =V or no oxygen = N, C = calibration, A=additional haul, M=pelagic haul TS_HaulVal	V

Field	Start	Width	Mandatory	Key	Range	Comments ICES website	Example
HydroStNo	25	8	✓	char		Station No as reported to the ICES hydrographer	22005
StdSpecRecCode	26	1	✓	char	See Annex 10	Use position 26 for standard and 27 for bycatch codes TS_StdSpecRecCode	1
BycSpecRecCode	27	1	✓	char		TS_BySpecRecCode	1
DataType	28	2	✓	char		TS_DataType	R
Netopening	29	4		decimal1	1.5 to 10.0	in metre	-9
Rigging	30	2		char		*Not used in this format*	-9
Tickler	31	2		int		*Not used in this format*	-9
Distance	32	4		int	0 to 9999.0	Distance towed over ground (m)	2896
Warplngt	33	4		Int	75 to 999	in metre	100
Warpdia	34	2		decimal1	10.0 to 60.0	in millimetre	-9
WarpDen	35	2		decimal2	0.50 to 2.00	See BITS manual	-9
DoorSurface	36	4		decimal1	1.0 to 10.0	in square metres	-9
DoorWgt	37	4		int	50 to 2000	in kilogramme	-9
DoorSpread	38	3		int	48 to 180	in metre	-9
WingSpread	39	2		int	12 to 30		-9
Buoyancy	40	4		int	50 to 220	in kilogramme	-9
KiteDim	41	3		decimal1	0.5 to 2.0	in square metre	-9
WgtGroundRope	42	4		int	0.0 to 800.0	in kilogramme	-9
TowDir	43	3		int	1 to 360, 999	999=varying	148
GroundSpeed	44	3		decimal1	2.0 to 6.0	ground speed of trawl in knots	-9
SpeedWater	45	3		decimal1	1.0 to 9.0	trawl speed through in knots	-9
SurCurDir	46	3		int	0 to 360	Slack water =0	-9
SurCurSpeed	47	4		decimal1	0.0 to 10.0	metres per sec	-9
BotCurDir	48	3		int	0 to 360	slack water =0	-9
BotCurSpeed	49	4		decimal1	0.0 to 10.0	metres per sec	-9
WindDir	50	3		int	0 to 360, 999	0 = calm, 999=varying	273
WindSpeed	51	3		int	0 to 100	metres per sec	6
SwellDir	52	3		int	0 to 360.		-9
SwellHeight	53	4		decimal1	0.0 to 25.0	in metre	-9
SurTemp	54	4	✓	decimal1	-1.0 to 30.0	in °C	11.0
BotTemp	55	4	✓	decimal1	-1.0 to 20.0	in °C	12.5

Field	Start	Width	Mandatory	Key	Range	Comments ICES website	Example
SurSal	56	5	✓	decimal2	5.00 to 30.00	in PSU	18.43
BotSal	57	5	✓	decimal2	5.00 to 30.00	in PSU	24.31
ThermoCline	58	2		char		TS_ThermoCline	-9
ThClineDepth	59	4		int	5 to 100	in metre	-9

***) 15 to 90 minutes if the validity code is "V". Zero minutes if the haul validity is "N". Zero to 90 minutes if haul validity is "I".**

Following changes were recommended by the WGBIFS (meeting in Lysekil; 30.03.–03.04.2009) in record type HH:

The variable is separated into two variables: H_Val ("V"=Valid, "I"=Invalid) and Station_type ("S"= Standard haul, "C"=Calibration haul, "N"=No oxygen at bottom (assumed zero catch), "A"= additional haul not allocated according to standard haul allocation procedure, "M"= trawling in the pelagic zone with midwater trawl).

The selection of which stations should be included in calculation of standard indices for assessments will then be defined based on the combination of the two information types by the following rules:

included= "V" and ("S" or "N"),

not included= "I" and/or ("A", #M" or "C")

6.4.2 Record type HL

Mandatory Record HL Length frequency distribution, fields are separated by comma

Field	Start	Width	Mandatory	Key	Range	Comments ICES website	Example
RecordType	1	2	✓	char	HL	Fixed value: HL	HL
Quarter	2	1	✓	int	1.0 to 4.0		4
Country	3	3	✓	char	See Annex 8	TS_Country	GFR
Ship	4	4	✓	char	See Annex 8	TS_Ship	SOL
Gear	5	6	✓	char	See Annex 9	Gear	TVS
SweepLngt	6	3		int	0 to 999		-9
GearExp	7	2		char		TS_GearExp	S
DoorType	8	2		char		TS_DoorType	-9
StNo	9	6	✓	char			22005
HaulNo	10	3	✓	int	1 to 999		5
Year	11	4	✓	char	1900 to 2099		2008
SpecCodeType	12	1	✓	char	T	T – TSN code TS_SpecCodeType	T
SpecCode	13	10	✓	char	See Annex 12	Official TSN code	161722
SpecVal	14	2	✓	char	See Annex 11	TS_SpecVal	1
Sex	15	2		char	F, M, U, -9	Male = M, Female =F, Unsexed = U, -9=unknown, TS_Sex	-9
TotalNo	16	9		decimal2	1.00 to 9999999.00	No specimen caught per hour	56
CatIdentifier	17	2	✓	int	1 to 5		1
NoMeas	18	4	✓	int	1 to 5000		56
SubFactor	19	9	✓	decimal4	1.0000 to 1000.0000	Raising factor*)	1
SubWgt	20	6		Int	0 to 500000.0		-9
CatCatchWgt	21	8	✓	Int	0 to 99999999		839
LngtCode	22	2	✓	char	., 0, 1, 9	-9 – missing value, . 1 mm, 0 – 0.5 cm, 1 – 1 cm TS_LngtCode	0
LngtClass	23	4	✓	Int	1 to 999	Identifier of lower bound of length distribution, e.g. 65-70 cm=65 For classes less than 1 cm there will be an implied decimal point after the second digit, e.g. 30.5-31.0 cm=305	105

Field	Start	Width	Mandatory	Key	Range	Comments ICES website	Example
HLNoAtLngt	24	6	✓	Decimal2	1.00 to 999999.00	Length classes with zero catch should be excluded from the record (no/hour equals the sum of no at length).	1

***) raising factor for converting observed catch.**

6.4.3 Record type CA

Optional Record CA SMALK, fields are separated by comma

Field	Start	Width	Mandatory	Key	Range	Comments ICES website	Example
RecordType	1	2	✓	char	CA	Fixed value: CA	CA
Quarter	2	1	✓	int	1 to 4		1
Country	3	3	✓	char	See Annex 8	TS_Country	GFR
Ship	4	4	✓	char	See Annex 8	TS_Ship	SOL
Gear	5	6	✓	char	See Annex 9	Gear	TVS
SweepLngt	6	3		int	0 to 999, Standard=75		-9
GearExp	7	2		char		TS_GearExp	S
DoorType	8	2		char		TS_DoorType	-9
StNo	9	6	✓	char			22005
HaulNo	10	3	✓	int	1 to 999		5
Year	11	4	✓	char	1900 to 2099		2008
SpecCodeType	12	1	✓✓	char	T	TS_SpecCodeType	T
SpecCode	13	10	✓	char	See Annex 12	Official TSN code	161722
AreaType	14	2	✓	char	-9, 0, 4	-9 – not provided, 0 – ICES statistical rectangle, 4 – Baltic ICES Subdivision, TS_AreaType	0
AreaCode	15	4	✓	char			37G0
LngtCode	16	2	✓	char	-9, ., 0, 1	-9 – missing value, . 1mm, 0 – 0.5 cm, 1 – 1 cm TS_LngthCode	1
LngtClass	17	4	✓	int	1 to 999	Identifier of lower bound of length distribution, e.g. 65-70 cm=65 For classes less than 1 cm there will be an implied decimal point after the second digit, e.g. 30.5-31.0 cm=305	27

Field	Start	Width	Mandatory	Key	Range	Comments ICES website	Example
Sex	18	2	✓	char	-9, M, F, U	-9 – unknown, M – Male, F – Female, U – Unsexed TS_Sex	F
Maturity*)	19	2	✓	char	-9, 1 to 6	-9 – missing value and Annex 1, TS_Maturity	5
PlusGr	20	2		char	+, -9	Plus group = +, else -9 TS_PlusGR	-9
AgeRings	21	2	✓	int	0. to 99, -9	Unknown age =-9	5
CANoAtLngt	22	3	✓	int	1 to 999		1
IndWgt	23	5		Decimal 1	1.0 to 99999.0	The mean weight of the number of fish in the record (in gram).	238

***)The ICES Planning Group on Commercial Catches, Discards and Biological Sampling (PGCCDBS), meeting in March 2008 in Nicosia/Cyprus.**

Example of conversion of fish maturity scale:

ICES (BIFSWG) modified scale	I	II	III	IV	V	VI
Maier's scale (modified)	I	III-V	VI-VII	VIII	II	IX

7 References

Alekseev, F. E., and Alekseeva, E. I. 1996. Assessment of gonad maturity stages and study of sex cycles, fecundity, eggs production and maturity rate of marine commercial fishes. AtlantNIRO, Kaliningrad. Mimeo, 75 pp. (In Russian).

Anon. 2001a. EU Study Project No. 98/099: Improvement of stock assessment and data collection by continuation, standardisation and design improvement of the Baltic International Bottom Trawl Survey for fishery resource assessment. Final and consolidated report. March-April 2001: 512 pp.

Anon. 2001b. Final report of the Establishing a Baltic International Trawl Survey Database. ICES/National Board of Fisheries of Sweden; final report of the EU Study Project No. 96/072.

Berner, M. 1960. Untersuchungen über den Dorschbestand (*Gadus morhua* L.) der Bornholm- und Arkonasee in den Jahren 1953–1955. Zeitschrift für Fischerei IX (7–10): 481–602.

Chrzan, F. 1951. Studies on the biology of cod in the Gulf of Gdańsk (in Polish). Report of the Sea Fisheries Institute in Gdynia, 6:1–28.

Elwertowski, J. 1957. Biologiczna charakterystyka polskich polowow szprota w Baltyku Poludniowym w latach 1950–1954. (Biological characteristic of Polish sprat catches in the southern Baltic in 1950–1954). Prace Morskiego Instytutu Rybackiego w Godyni, 9:175–220.

Heincke, F. 1898. Naturgeschichte des Herings. Abhandlungen des Deutschen Seefischerei-Vereins, 2:1–223.

ICES. 1985. Report on the ad hoc Working Group on Young Fish Trawl Surveys in the Baltic. ICES Council Meeting Paper/J:5.

ICES. 1987. Report of the Study Group on Young Fish Surveys in the Baltic. ICES Council Meeting Paper/J:22.

ICES. 1995. Report of the Study Group on Assessment-related Research Activities Relevant to Baltic Fish Resources. ICES Council Meetimg Pap./J:1.

ICES. 1996. Third periodic assessment of the state of the marine environment of the Baltic Sea, 1989–1993. Background documents. Baltic Sea Environment Proceedings No. 64B.

ICES. 2001. Report of the Baltic International Fish Survey Working Group. ICES CM 2001/H:2.

ICES. 2002. Report of the Baltic International Fish Survey Working Group. ICES CM 2002/G:5.

ICES. 2003. Report of the Baltic International Fish Survey Working Group. ICES CM 2003/G:05, Ref. D, H, 302 pp.

ICES. 2004. Report of the Baltic International Fish Survey Working Group. ICES CM 2004/G:08, Ref. D, H, 162 pp.

ICES. 2005. Report of the Baltic International Fish Survey Working Group. ICES CM 2004/G:08, Ref. D, H, 162 pp.

ICES. 2006. Report of the workshop on Implementation in DATRAS of Confidence Limits Estimation of Abundance Indices from Bottom Trawls Surveys. 10–12 May 2006. ICES DATRAS Report. 39 pp.

Kiselevich, K. 1923. Instructions for biological observations. (In Russian). Referred in Pravdin (1966).

Lewy, P., Nielsen, J. R., and Hovgård, H. 2004. Survey gear calibration independent of spatial fish distribution. Canadian Journal of Fisheries Aquatic Sciences 61(4): 636–647.

Maier, N. N. 1908. Beiträge zur Altersbestimmung der Fische. I.Allgemeines. Die Altersbestimmung nach Otolithen bei Scholle und Kabeljau. Wissensch. Meeresunters, 8: 60–115.

Müller, H. 1996. Minimum sample sizes for length distributions of catch estimated by an empirical approach. ICES CM 1996/J:12, 18pp.

Netzel, J. 1974. Polish investigations on juvenile cod in the Gdańsk Bay and the southern part of Bornholm Basin. Rapports et Procès-Verbaux des Réunions, Conseil Internationel Pour l'Exploration de la Mer, 166: 62–65.

Oeberst, R., and Frieß, C. C. 1994. Vergleich der Fängigkeit der Netze HG20/25 und Sønderburger Trawl für die im Institut für Ostseefischerei durchgeführte Jungfischaufnahmen. Informationen für die Fischwirtschaft aus der Fischereiforschung, 2 (41): 75–81.

Oeberst, R. 2000. An universal cost function for the optimisation of the number of age readings and length measurements for Age-Length-Key-Tables (ALKT). Archive of Fishery and Marine Research, 48 (1), 2000, 43–60.

Oeberst, R. 2003. Optimal size of units for allocating hauls of Baltic international trawl surveys. ICES CM 2003/G:05, Ref. D, H, 118–127p.

Oeberst, R., and Grygiel, W. 2002. Analyses of conversion factors. Working paper [in:] Report of the Baltic International Fish Survey Working Group ICES CM 2002/G:05, Ref. H; 108–118.

Oeberst, R., and Grygiel, W. 2004. Estimates of the fishing power of bottom trawls applied in the Baltic fish surveys. Bulletin of the Sea Fisheries Institute, Gdynia, No. 1(161): 29–41.

Popiel, J. 1955. Z biologii sledzi baltyckich. [Biology of Baltic herring]. Prace Morskiego Instytutu Rybackiego w Godyni 8:5–68.

Pravdin, I. 1966. Guidelines for fisheries investigations. Pischevaja Promyshlenost Publ., Moscow. 376 pp. (In Russian).

Schulz, N., and Grygiel, W. 1984. First results of intercalibration of young fish trawls used in the Baltic Sea by GDR and Poland. ICES C.M. 1984/J:6, B.F.C.; 9 pp.

Schulz, N., and Grygiel, W. 1987. Fängigkeitsvergleich zwischen den von der DDR und der VR Polen in der Ostsee eingesetzten Jungfischnetzen. Fischerei-Forschung, 25 J., H. 2, Rostock: 36–51.

Sorokin, V. P. 1957. The oogenesis and reproduction cycle of cod (*Gadus morhua L.*). Trudy PINRO 10:125–144. (In Russian). (English translation No. 72F49, Ministry of Agriculture, Fisheries and Food, United Kingdom 1961.)

Sparholt, H., and Tomkiewicz, J. 2000. A robust method for compiling trawl survey data used in the assessment of central Baltic cod (*Gadus morhua* L.). Archive of Fishery and Marine Research, 48 (2):125–151.

Strzyzewska, K. 1969. Studium porownawcze populacji sledzio tracych sie u polskich wybrzezy Baltyku. Prace Morskiego Instytutu Rybackiego Seria A. Oceanografia i Biologia Rybacka: 211–278.

Annex 1: Baltic Sea with the ICES Subdivisions and rectangle codes

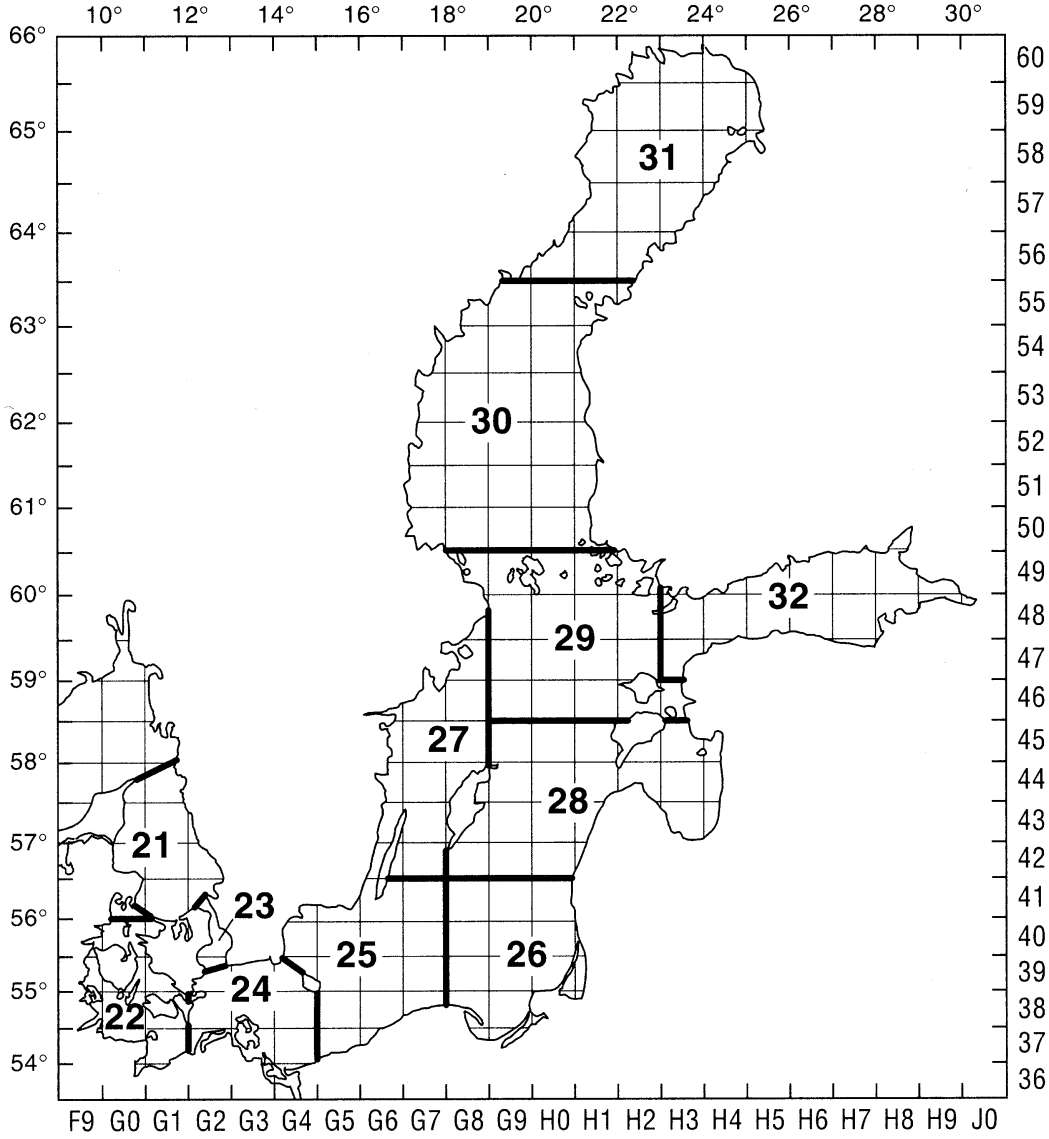

Annex 2: Assignment of quarters of rectangles to the ICES Subdivisions

			10°00		12°00		14°00		16°00		18°00		20°00		
		F9 F9	G 0 G 0	G 1 G 1	G 2 G 2	G 3 G 3	G 4 G 4	G 5 G 5	G 6 G 6	G 7 G 7	G 8 G 8	G 9 G 9	H 0 H 0	H 1 H 1	H 2 H 2
	50														
60°30	50														
	49										29 29	29 29	29 29	29 29	29 29
60°00	49										29 29	29 29	29 29	29 29	29 29
	48											29 29	29 29	29 29	29 29
59°30	48										29	29 29	29 29	29 29	29 29
	47										27 27	29 29	29 29	29 29	29 29
59°00	47										27 27	29 29	29 29	29 29	29 29
	46									27 27	27 27	29 29	29 29	29 29	29 29
58°30	46								27 27	27 27	27 27	29 29	29 29	29 29	29 29
	45								27 27	27 27	27 27	28 28	28 28	28 28	
58°00	45								27	27 27	27 27	28 28	28 28	28 28	
	44			21 21					27 27	27 27	27 27	28 28	28 28	28 28	
57°30	44		21	21 21					27	27 27	27 28	28 28	28 28	28 28	
	43		21	21 21	21				27 27	27 27	27 28	28 28	28 28	28 28	
57°00	43		21 21	21 21	21				27 27	27 27	27 28	28 28	28 28	28	
	42		21 21	21 21	21 21				27 27	27 27	28 28	28 28	28 28	28	
56°30	42		21 21	21 21	21 21				27 27	27 27	28 28	28 28	28 28	28	
	41		21	21 21	21 21				25 25	25 25	26 26	26 26	26 26		
56°00	41		22 22	21 21	23 23		25 25	25 25	25 25	25 25	26 26	26 26	26 26	26	
	40		22 22	22 22	23 23		25 25	25 25	25 25	25 25	26 26	26 26	26 26	26	
55°30	40	22	22 22	22	23 23		25 25	25 25	25 25	25 25	26 26	26 26	26 26	26	
	39	22	22	22	23 23	24 24	24 25	25 25	25 25	25 25	26 26	26 26	26 26	26	
55°00	39	22	22 22	22 22	24 24	24 24	24 24	25 25	25 25	25 25	26 26	26 26	26 26		
	38	22	22 22	22 22	24 24	24 24	24 24	25 25	25 25	25 25	26 26	26 26	26		
54°30	38	22	22 22	22 22	24 24	24 24	24 24	25 25	25 25	25	26 26	26 26	26 26		
	37		22 22	22 22	24 24	24 24	24 24	25 25	25		26	26 26			
54°00	37		22	22 22	24	24 24	24 24	25 25							
	36		22												
	36														
		F9 F9	G 0 G 0	G 1 G 1	G 2 G 2	G 3 G 3	G 4 G 4	G 5 G 5	G 6 G 6	G 7 G 7	G 8 G 8	G 9 G 9	H 0 H 0	H 1 H 1	H 2 H 2

Annex 3: Areas in nm² by 10 m depth layer and rectangle

Strata	**SD 21**	44G0	44G1	43G0	43G1	43G2	42G0	42G1	42G2	41G0	41G1	39G0
Depth interval												
total	**6123.3**	**233.7**	**612.6**	**507.4**	**926.1**	**143.9**	**662.3**	**980.3**	**647.0**	**62.2**	**993.3**	**354.4**
0 - 9	**1166.6**	12.8	79.0	278.0	214.2	35.7	355.3	92.1	37.3	13.3	31.1	17.8
10 - 19	**1677.5**	39.5	44.8	143.9	121.2	37.9	307.0	438.6	154.6	41.1	298.9	50.0
20 - 29	**1419.5**	100.3	12.8	46.5	77.9	27.0	0.0	182.0	198.5	7.8	575.6	191.1
30 - 39	**846.8**	75.8	81.1	31.4	109.3	15.1	0.0	196.3	162.3	0.0	83.3	92.2
40 - 49	**467.7**	5.3	120.6	7.6	168.8	16.2	0.0	58.1	83.3	0.0	4.4	3.3
50 - 59	**255.1**	0.0	106.7	0.0	123.3	11.9	0.0	3.3	9.9	0.0	0.0	0.0
60 - 69	**100.1**	0.0	43.8	0.0	50.8	0.0	0.0	4.4	1.1	0.0	0.0	0.0
70 - 79	**79.4**	0.0	47.0	0.0	30.3	0.0	0.0	2.2	0.0	0.0	0.0	0.0
80 - 89	**46.1**	0.0	28.8	0.0	16.2	0.0	0.0	1.1	0.0	0.0	0.0	0.0
90 - 99	**32.1**	0.0	23.5	0.0	7.6	0.0	0.0	1.1	0.0	0.0	0.0	0.0
100 - 150	**32.1**	0.0	24.5	0.0	6.5	0.0	0.0	1.1	0.0	0.0	0.0	0.0
> 150	**0.0**	0.0	0.0	0.0	0.0	0.0	0.0	0.0	0.0	0.0	0.0	0.0

strata	**SD 22**	41G0	40F9	40G0	40G1	39F9	39G0	39G1	38F9	38G0	38G1	37G0	37G1	36G0
Depth interval														
total	**5162.8**	**186.7**	**90.0**	**790.1**	**282.5**	**263.3**	**338.6**	**412.7**	**90.0**	**928.1**	**528.7**	**278.1**	**820.2**	**153.7**
0 - 9	**1489.5**	32.2	21.4	238.6	117.1	83.2	99.2	161.9	27.7	166.2	334.8	72.4	99.3	35.5
10 - 19	**2132.9**	55.6	67.5	327.5	159.8	91.2	142.5	206.3	30.0	417.9	105.0	171.8	243.0	114.7
20 - 29	**1436.9**	94.4	1.1	184.6	4.5	84.4	90.1	31.9	32.3	312.8	85.4	33.9	477.9	3.5
30 - 39	**92.3**	3.3	0.0	32.6	1.1	4.6	6.8	9.1	0.0	31.2	3.5	0.0	0.0	0.0
40 - 49	**10.1**	1.1	0.0	6.8	0.0	0.0	0.0	2.3	0.0	0.0	0.0	0.0	0.0	0.0
50 - 59	**0.0**	0.0	0.0	0.0	0.0	0.0	0.0	0.0	0.0	0.0	0.0	0.0	0.0	0.0
60 - 69	**1.1**	0.0	0.0	0.0	0.0	0.0	0.0	1.1	0.0	0.0	0.0	0.0	0.0	0.0
70 - 79	**0.0**	0.0	0.0	0.0	0.0	0.0	0.0	0.0	0.0	0.0	0.0	0.0	0.0	0.0
80 - 89	**0.0**	0.0	0.0	0.0	0.0	0.0	0.0	0.0	0.0	0.0	0.0	0.0	0.0	0.0
90 - 99	**0.0**	0.0	0.0	0.0	0.0	0.0	0.0	0.0	0.0	0.0	0.0	0.0	0.0	0.0
100 - 150	**0.0**	0.0	0.0	0.0	0.0	0.0	0.0	0.0	0.0	0.0	0.0	0.0	0.0	0.0
> 150	**0.0**	0.0	0.0	0.0	0.0	0.0	0.0	0.0	0.0	0.0	0.0	0.0	0.0	0.0

strata	**SD 23**	41g2	40g2	39g2
Depth interval				
total	**896.5**	**186.7**	**384.9**	**324.9**
0 - 9	**319.2**	32.2	200.3	86.6
10 - 19	**403.4**	55.6	165.5	182.4
20 - 29	**166.1**	94.4	15.8	55.9
30 - 39	**6.7**	3.3	3.4	0.0
40 - 49	**1.1**	1.1	0.0	0.0
50 - 59	**0.0**	0.0	0.0	0.0
60 - 69	**0.0**	0.0	0.0	0.0
70 - 79	**0.0**	0.0	0.0	0.0
80 - 89	**0.0**	0.0	0.0	0.0
90 - 99	**0.0**	0.0	0.0	0.0
100 - 150	**0.0**	0.0	0.0	0.0
> 150	**0.0**	0.0	0.0	0.0

strata	**SD 24**	39G2	39G3	39G4	38G2	38G3	38G4	37G2	37G3	37G4
Depth interval										
total	**6509.3**	**430.9**	**819.7**	**598.5**	**948.9**	**939.6**	**1038.9**	**266.4**	**461.5**	**1004.9**
0 - 9	**785.4**	88.9	31.9	21.7	85.4	78.5	2.3	92.3	271.1	113.3
10 - 19	**2461.5**	205.2	76.4	83.2	557.5	99.3	255.1	136.7	182.3	865.8
20 - 29	**1091.3**	127.7	114.0	63.8	252.8	170.8	292.0	37.4	8.2	24.5
30 - 39	**621.4**	9.1	176.7	65.0	49.6	152.4	167.4	0.0	0.0	1.2
40 - 49	**1396.6**	0.0	420.7	328.3	3.5	438.6	205.5	0.0	0.0	0.0
50 - 59	**124.3**	0.0	0.0	28.5	0.0	0.0	95.8	0.0	0.0	0.0
60 - 69	**28.8**	0.0	0.0	8.0	0.0	0.0	20.8	0.0	0.0	0.0
70 - 79	**0.0**	0.0	0.0	0.0	0.0	0.0	0.0	0.0	0.0	0.0
80 - 89	**0.0**	0.0	0.0	0.0	0.0	0.0	0.0	0.0	0.0	0.0
90 - 99	**0.0**	0.0	0.0	0.0	0.0	0.0	0.0	0.0	0.0	0.0
100 - 150	**0.0**	0.0	0.0	0.0	0.0	0.0	0.0	0.0	0.0	0.0
> 150	**0.0**	0.0	0.0	0.0	0.0	0.0	0.0	0.0	0.0	0.0

strata	**SD 25**	41G4	41G5	41G6	41G7	40G4	40G5	40G6	40G7	39G4	39G5	39G6	39G7	38G5	38G6	38G7	37G5	37G6
Depth interval																		
total	**12615.9**	**113.3**	**307.8**	**876.7**	**1000.0**	**747.4**	**1013.0**	**1013.0**	**1013.0**	**249.7**	**986.1**	**1026.0**	**1026.0**	**1038.9**	**940.8**	**475.6**	**657.8**	**130.9**
0 - 9	**332.5**	41.1	88.9	88.9	0.0	39.4	1.1	0.0	0.0	2.3	4.6	0.0	0.0	1.2	10.4	20.8	24.5	9.3
10 - 19	**1110.7**	21.1	57.8	132.2	26.7	122.7	7.9	0.0	63.0	2.3	4.6	8.0	0.0	3.5	188.2	118.9	289.8	64.3
20 - 29	**1324.6**	20.0	61.1	101.1	140.0	135.1	11.3	0.0	115.9	11.4	6.8	51.3	0.0	4.6	207.8	277.0	140.2	40.9
30 - 39	**2096.5**	31.1	82.2	250.0	358.9	86.7	88.9	185.7	318.5	10.3	9.1	67.3	78.7	33.5	301.3	58.9	119.2	16.4
40 - 49	**1749.4**	0.0	17.8	128.9	231.1	162.1	221.7	261.1	118.2	36.5	18.2	78.7	183.5	86.6	151.2	0.0	53.7	0.0
50 - 59	**1504.4**	0.0	0.0	96.7	184.4	70.9	139.6	174.5	129.4	47.9	34.2	109.4	189.2	249.3	48.5	0.0	30.4	0.0
60 - 69	**1531.6**	0.0	0.0	72.2	57.8	46.1	180.1	171.1	243.1	53.6	49.0	199.5	119.7	322.1	17.3	0.0	0.0	0.0
70 - 79	**1505.4**	0.0	0.0	6.7	1.1	75.4	228.5	197.0	24.8	73.0	169.9	249.7	239.4	223.9	16.2	0.0	0.0	0.0
80 - 89	**797.5**	0.0	0.0	0.0	0.0	9.0	115.9	23.6	0.0	12.5	212.0	158.5	151.6	114.3	0.0	0.0	0.0	0.0
90 - 99	**638.2**	0.0	0.0	0.0	0.0	0.0	18.0	0.0	0.0	0.0	457.1	103.7	59.3	0.0	0.0	0.0	0.0	0.0
100 - 150	**25.1**	0.0	0.0	0.0	0.0	0.0	0.0	0.0	0.0	0.0	20.5	0.0	4.6	0.0	0.0	0.0	0.0	0.0
> 150	**0.0**	0.0	0.0	0.0	0.0	0.0	0.0	0.0	0.0	0.0	0.0	0.0	0.0	0.0	0.0	0.0	0.0	0.0

strata	**SD 26**	41G8	41G9	41H0	41H1	40G8	40G9	40H0	40H1	39G8	39G9	39H0	39H1	38G8	38G9	38H0	37G8	37G9
Depth interval																		
total	**10967.1**	**1000.0**	**1000.0**	**982.2**	**15.6**	**1013.0**	**1013.0**	**1013.0**	**69.8**	**1026.0**	**1026.0**	**877.8**	**11.4**	**698.4**	**922.3**	**40.4**	**107.5**	**150.7**
0 - 9	**218.0**	0.0	0.0	37.8	8.9	0.0	0.0	4.5	28.1	0.0	0.0	11.4	4.6	60.0	21.9	9.2	18.7	12.9
10 - 19	**475.3**	2.2	0.0	123.3	6.7	0.0	0.0	28.1	14.6	0.0	0.0	46.7	4.6	110.8	50.8	23.1	46.7	17.5
20 - 29	**713.9**	85.6	0.0	157.8	0.0	0.0	0.0	48.4	27.0	4.6	0.0	177.8	2.3	121.2	48.5	8.1	15.2	17.5
30 - 39	**1189.8**	142.2	0.0	355.6	0.0	0.0	0.0	208.2	0.0	25.1	2.3	274.7	0.0	78.5	68.1	0.0	11.7	23.4
40 - 49	**674.0**	78.9	7.8	81.1	0.0	0.0	0.0	203.7	0.0	17.1	9.1	177.8	0.0	35.8	32.3	0.0	5.8	24.5
50 - 59	**844.5**	72.2	95.6	101.1	0.0	39.4	65.3	206.0	0.0	36.5	17.1	101.5	0.0	31.2	54.3	0.0	7.0	17.5
60 - 69	**966.4**	32.2	137.8	58.9	0.0	85.5	182.3	141.8	0.0	69.5	76.4	66.1	0.0	46.2	38.1	0.0	2.3	29.2
70 - 79	**944.4**	47.8	63.3	36.7	0.0	68.7	194.7	100.2	0.0	148.2	102.6	17.1	0.0	39.2	117.7	0.0	0.0	8.2
80 - 89	**1488.2**	48.9	54.4	18.9	0.0	168.8	328.7	72.0	0.0	438.9	204.1	4.6	0.0	45.0	103.9	0.0	0.0	0.0
90 - 99	**1383.4**	104.4	61.1	10.0	0.0	210.5	192.5	0.0	0.0	283.9	336.3	0.0	0.0	71.6	113.1	0.0	0.0	0.0
100 - 150	**2069.2**	385.6	580.0	1.1	0.0	440.1	49.5	0.0	0.0	2.3	278.2	0.0	0.0	58.9	273.6	0.0	0.0	0.0
> 150	**0.0**	0.0	0.0	0.0	0.0	0.0	0.0	0.0	0.0	0.0	0.0	0.0	0.0	0.0	0.0	0.0	0.0	0.0

strata	**SD 27**	42G6	42G7	43G6	43G7	43G8	44G6	44G7	44G8	45G6	45G7	45G8	46G6	46G7	46G8	47G8
Depth interval																
total	**8826.6**	**427.7**	**986.9**	**389.5**	**945.6**	**189.3**	**331.9**	**960.5**	**435.4**	**194.7**	**947.2**	**947.2**	**78.2**	**598.1**	**915.9**	**478.6**
0 - 9	**1014.8**	150.2	0.0	108.2	26.0	66.0	121.7	0.0	8.5	117.9	28.4	0.0	36.5	121.9	28.1	201.4
10 - 19	**700.5**	111.8	0.0	60.6	45.4	53.0	61.9	1.1	10.7	42.1	36.8	0.0	28.1	102.1	28.1	118.6
20 - 29	**525.3**	31.8	3.3	114.7	41.1	30.3	44.8	1.1	11.7	20.0	46.3	0.0	8.3	91.7	20.8	59.3
30 - 39	**415.7**	23.0	14.3	70.3	47.6	38.9	27.7	3.2	8.5	10.5	33.7	1.1	4.2	74.0	20.8	37.8
40 - 49	**538.2**	23.0	24.1	32.5	92.0	1.1	55.5	24.5	18.1	4.2	92.6	13.7	1.0	75.0	54.2	26.6
50 - 59	**562.5**	25.2	205.1	3.2	76.8	0.0	17.1	45.9	9.6	0.0	52.6	13.7	0.0	51.1	45.8	16.4
60 - 69	**463.9**	23.0	168.9	0.0	66.0	0.0	3.2	39.5	10.7	0.0	52.6	11.6	0.0	26.1	57.3	5.1
70 - 79	**532.3**	38.4	190.8	0.0	100.6	0.0	0.0	50.2	23.5	0.0	57.9	23.2	0.0	14.6	26.1	7.2
80 - 89	**634.0**	1.1	201.8	0.0	110.4	0.0	0.0	64.0	54.4	0.0	91.6	42.1	0.0	19.8	43.8	5.1
90 - 99	**961.6**	0.0	154.6	0.0	145.0	0.0	0.0	233.7	124.9	0.0	90.5	144.2	0.0	15.6	53.1	0.0
100 - 150	**1782.0**	0.0	24.1	0.0	194.7	0.0	0.0	399.1	154.7	0.0	280.0	521.0	0.0	6.3	201.1	1.0
> 150	**695.8**	0.0	0.0	0.0	0.0	0.0	0.0	98.2	0.0	0.0	84.2	176.8	0.0	0.0	336.6	0.0

strata	**SD 28**	42G8	42G9	42H0	42H1	43G8	43G9	43H0	43H1	44G8	44G9	44H0	44H1	45G9	45H0	45H1
Depth interval																
total	**11398.4**	**963.9**	**986.9**	**982.5**	**75.7**	**347.3**	**973.7**	**973.7**	**434.9**	**100.3**	**923.1**	**960.5**	**887.9**	**937.7**	**947.2**	**903.0**
0 - 9	**353.5**	9.9	0.0	18.6	28.5	41.1	1.1	0.0	38.9	13.9	34.2	0.0	72.6	16.8	0.0	77.9
10 - 19	**733.7**	62.5	0.0	66.9	30.7	56.3	2.2	5.4	117.9	22.4	44.8	4.3	180.4	28.4	0.0	111.6
20 - 29	**974.3**	239.0	0.0	84.4	16.4	59.5	10.8	40.0	114.7	39.5	30.9	4.3	151.5	25.3	0.0	157.9
30 - 39	**881.0**	227.0	0.0	102.0	0.0	56.3	18.4	64.9	49.8	24.5	63.0	2.1	112.1	31.6	14.7	114.7
40 - 49	**772.7**	117.3	0.0	89.9	0.0	35.7	19.5	97.4	26.0	0.0	60.8	25.6	112.1	62.1	23.2	103.1
50 - 59	**825.2**	68.0	0.0	112.9	0.0	33.5	30.3	94.1	28.1	0.0	65.1	37.4	149.4	46.3	25.3	134.7
60 - 69	**621.4**	23.0	0.0	73.5	0.0	17.3	40.0	51.9	54.1	0.0	57.6	55.5	76.8	51.6	41.0	78.9
70 - 79	**479.7**	48.2	0.0	65.8	0.0	11.9	44.4	49.8	5.4	0.0	53.4	52.3	14.9	53.7	42.1	37.9
80 - 89	**614.3**	36.2	0.0	38.4	0.0	8.7	59.5	82.2	0.0	0.0	73.6	60.8	13.9	58.9	147.3	34.7
90 - 99	**774.5**	37.3	0.0	37.3	0.0	8.7	71.4	73.6	0.0	0.0	105.7	122.7	4.3	89.5	175.8	48.4
100 - 150	**2935.0**	95.4	540.6	219.3	0.0	18.4	440.3	135.2	0.0	0.0	265.7	470.6	0.0	301.0	445.2	3.2
> 150	**1433.1**	0.0	446.3	73.5	0.0	0.0	235.9	279.1	0.0	0.0	68.3	124.9	0.0	172.6	32.6	0.0

Annex 4: Manual of the construction and use of the International Standard Trawl for the Baltic Demersal Surveys, TV-3#520

TV-3#520 meshes

References

Anonymous. 1998. Report of the Baltic International Fish Survey Working Group. Karlskrona, 8–13 June 1998. ICES CM 1998/H:4.

Contents

Two trawls are specified as International Standard Trawls for Baltic Demersal Surveys:

- TV3 520 meshes in the circumference for vessels less than 600 KW (This manual)
- TV3 930 meshes in the circumference for vessels of more than 600 KW (Separate manual)

This manual includes:

- Parts list
- A plot of the specifications of the net
- Three pages of detailed drawings of selected items
- Check lists
- Check guide

Notes to the construction

The nets should be made from good quality polyethylene netting, except the codend, which is made from polyamide. It will however not be possible for the net manufacturer always to obtain sheet netting of exactly the same length as specified in this manual. Thorough care must be taken to obtain materials with properties as close as possible to the ones specified here. The denomination of the sheet netting differs from manufacturer to manufacturer, but the following table should give the most common 'translations'.

	Chemical Composition	Construction	Diameter	International denomination	Trade 'name'
Front part and front belly	PE	Twisted	2.17	500/36	3/12
Rear belly	PE	Twisted	1.71	500/24	3/8
Codend	PA	Twisted	1.32	210/30	no. 10

IMPORTANT: It is very important to maintain the original relationship (hanging ratio, difference in length) between the netting lengths and the framing ropes along the headline and footrope. So if the headline in a section shall be 10% longer than the net according to this manual, it must be so, also if the dimensions of the net differ from the present specification.

Operation of the standard trawls

Towing speed

The towing speed should be 3.0 knots.

Warp length

It is recommended to use the following table for finding the correct warp length to be used at various fishing depths. The table gives different warp lengths for a range of warp constructions given by diameter and weight per metre.

It is recommended according to practical experience that the warps length should not less than 125 metre as it will decrease the door spread too much.

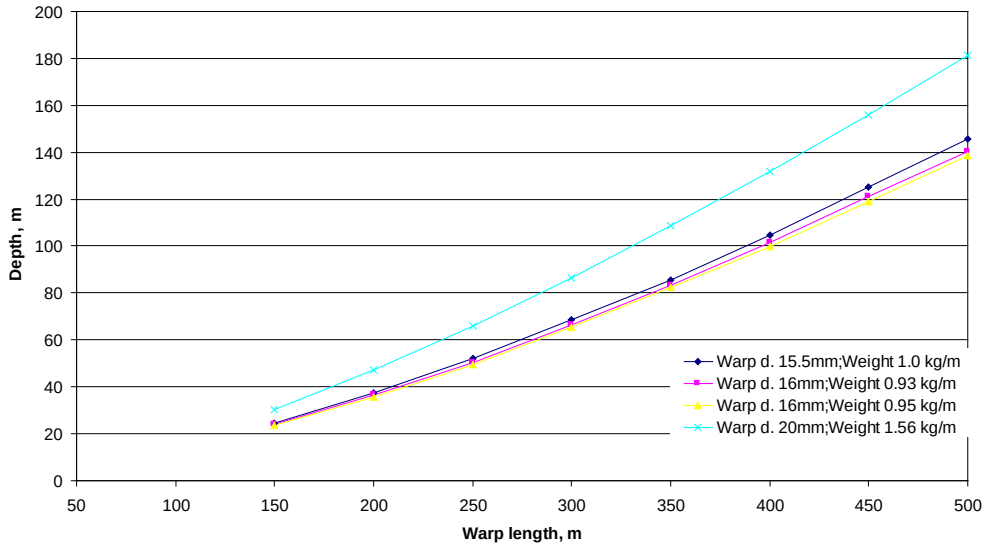

(The figures have been obtained using software developed at Kaliningrad State Technical University, by Professor Rosenstein).

The recommended warp length in the upper figure for warp diameter 15/16 mm should be taken as maximum. When using warps 15/16 mm their length could be less the results from the figure, but not less than the results from the curve of 20 mm.

Trawl geometry

The shape of the trawl is depending on many parameters of which some are being standardized here by using the same procedures. Nevertheless, when working on different depths and using different lengths of towing warp the door spread will change, and therefore also the height of the net. The table below shows the relationship between the basic geometric parameters for the standard trawl using the specified 97.2 m distance between trawl door and the net (8 + 75 + 2.1 + 9.1 + 3 m). They are based on model measurements and full-scale measurements at sea using acoustic measuring devices.

Door spread, m	50	55	60	65
Trawl vertical opening, m	2,3	2,1	1,8	1,7
Headline spread, m	13	14,5	16	17,5
Angle of sweeps, degrees	11	12	13	14

If trawl monitoring instruments (like SCANMAR) are used on the trawl the table can be used to check if the trawl is working properly. Care should be taken that the instruments are neutrally buoyant in water.

Maintenance

The net should be regularly checked for wear and tear and all damages shall be repaired upon discovery.

The net will eventually stretch under normal fishing conditions. It is important for its fishing performance and for maintaining a constant fishing efficiency at regularly intervals to check the length of the bridles, sweeps, extensions, netting sections etc.

The overall status for the net should be checked at the beginning of every cruise. Every year a detailed check should be made of all net and rope dimensions. (The interval between checks is depending on the time the net is in use. An annual check is regarded sufficient if the net is used for one or two normal surveys a year). The special check guide attached to this manual can be used.

IMPORTANT: Special attention should be given to ensure that the relationship (difference) between the length of the netting sections in the top and bottom panels are maintained. Lower sections are a half mesh or a full mesh longer than the corresponding top section. These differences have to be maintained by monitoring the net at regular intervals.

In the case that the difference is larger than 1 mesh size the bottom section must be shortened to the proper size.

Also the relationship between the length of the framing ropes and the nets in the wings and arms must be retained. The percentage the net is stretched on the headline and footrope is given in the specification. When the netting after a period of use loses its stretch, the headline and footrope must be cut off, the net in the wings and arms shortened and remounted on the ropes again.

TV-3#520

Parts List

International Standard Trawl for Baltic Demersal Surveys

Note: In this list, the term weight is used for mass and the unit is kg.

	No	Item	Description	Size
Trawl doors				
	2	Doors	Cambered V-doors, Type: Thyborøn Trawl Doors Type 2	1.78 m² (63 inch) Weight 235 kg
		Front Chain	Recommended setting: 18 links using link 3 for warp attachment	Inside length of link 80 mm
		Back Chain	Recommended setting Top chain: 7 links Horizontal chain: 18 links Bottom chain: 5 links	Inside length of link: 63 mm
	2	Back strop	Combination rope	Ø = no standard Length 8 m
Sweeps				
	2	Sweep	Wire Rubber disks	Ø = 10 mm Length 75 metre Weight per metre 0.36 kg Ø = 35 mm
Chain between sweeps and bridles				
	2	Chain	Iron	Length 2.1 m Weight: 20 kg
Bridles				
	4	Upper bridle	Combination rope	Ø = 12 mm Length: 9.1 m Weight per metre 0.2 kg
	2	Lower bridle	Wire Rubber discs Lead weights with centre hole distributed evenly, every 40 cm	Ø = 10 mm Length 9.1 m Weight per metre 0.36 Ø = 35 mm 22 pieces of 250 g each on each lower bridle
Floats				
	(11)	Floats	(4 litre (same as 200 mm, 8 inch) plastic floats)	Total lifting force: 38.5 kg (equivalent to 11 pcs. of 200 mm plastic floats)

Headline and Fishing line				
	1	Headline	Combination rope, stainless	Ø = 12 mm Length 34.16 m incl. extension Weight per metre 0.2 kg
	1	Fishing line	Combination rope, stainless Chain weight	Ø = 12 mm Length 37.66 m incl. extension and weight Weight per metre 0.2 kg Length 2.1 m Weight 20 kg
Footrope				
		Centre Wire	Stainless steel wire	Ø = 9.5 mm Weight per metre 0.34 kg
	108	Rubber discs	Rubber discs with side hole	100 mm
		Filling the space between rubber discs	Plastic or rubber tube Rubber discs on each side of rubber disc 28 pcs. of lead, (1 every third space)	Ø = 12 mm/14 mm Ø = 35 mm 250 g each piece
		Rope to mount the gear	Danline mounted in bights on the fishing line and through the rubber discs.	Ø = 12 mm The size of the bights makes the footrope disc periphery hang 4 cm below the fishing line
Attachments				
		Lazy deckie	No standard	
		Tackle strop	No standard	

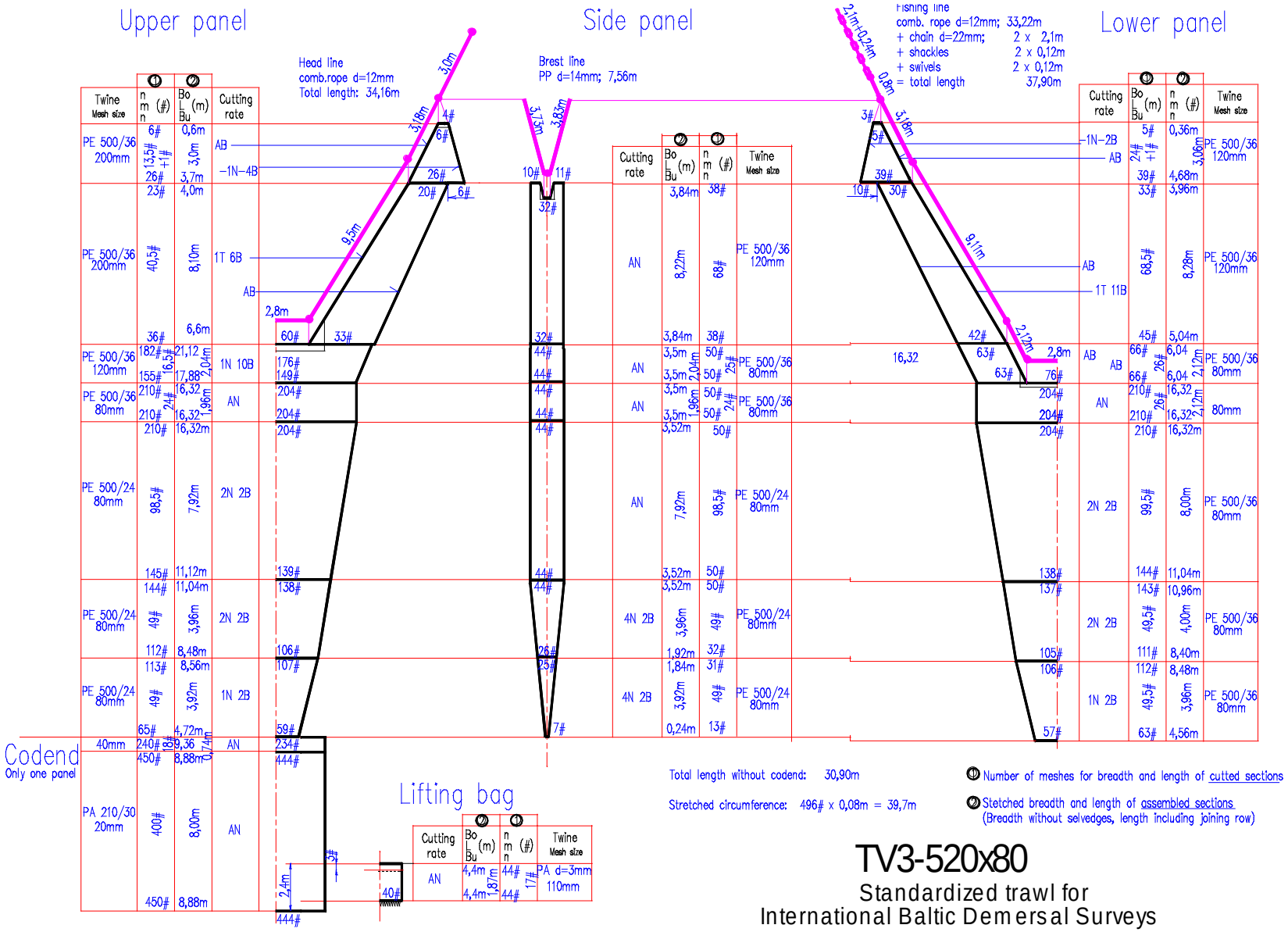

TV3-520x80

Standardized trawl for
International Baltic Demersal Surveys

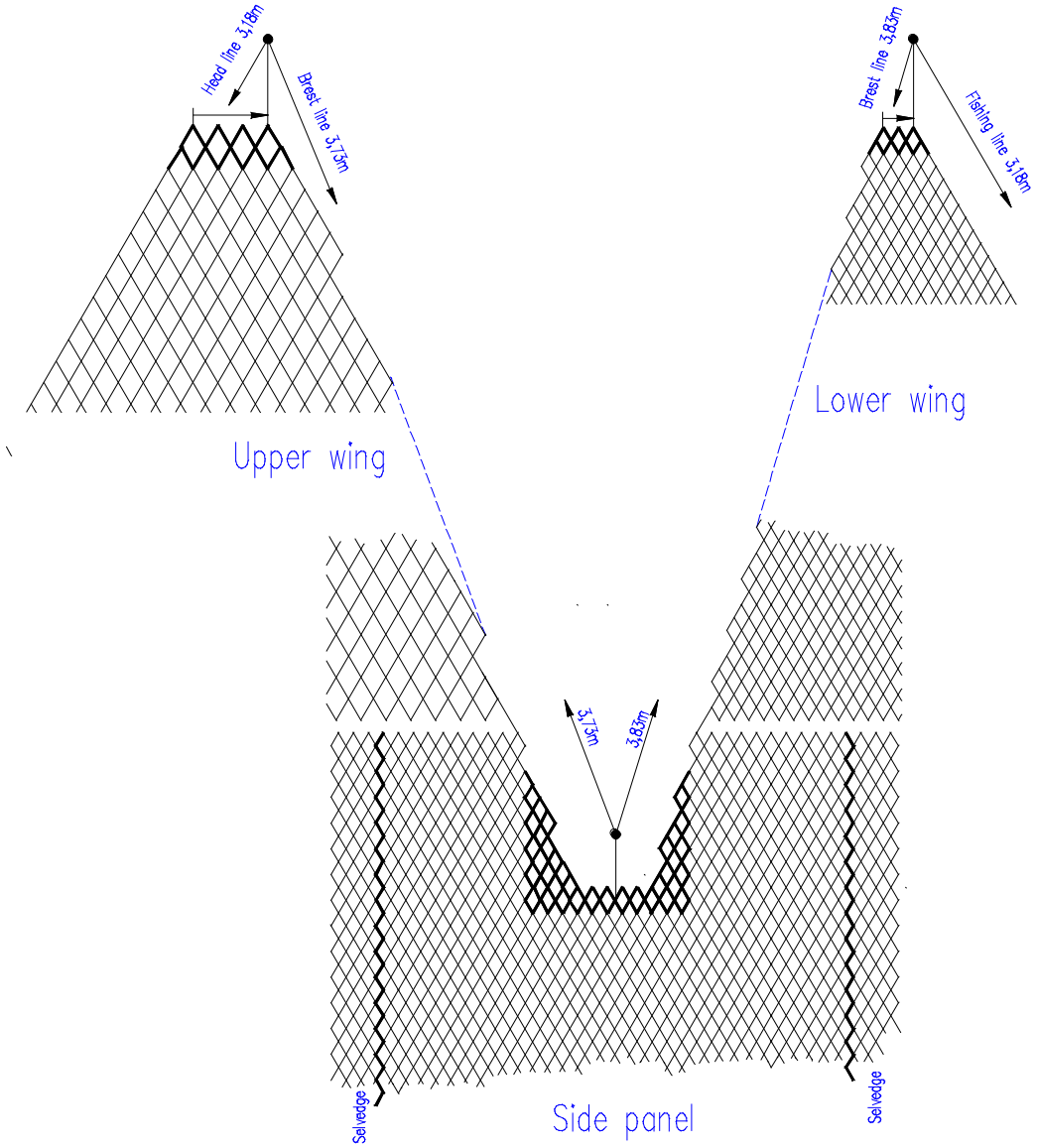

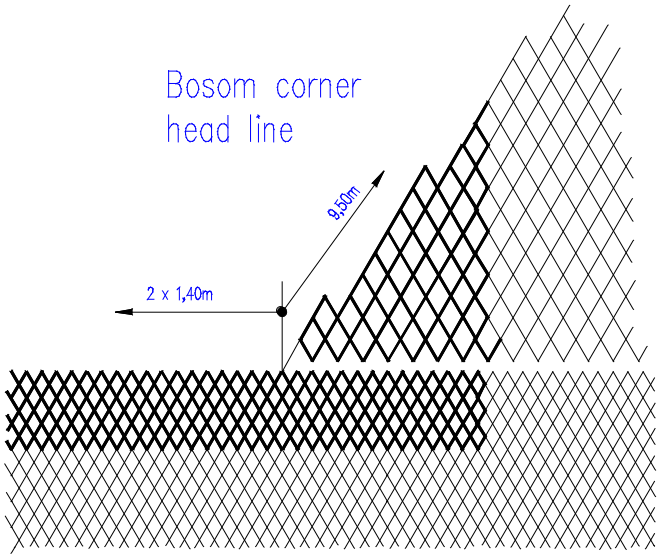

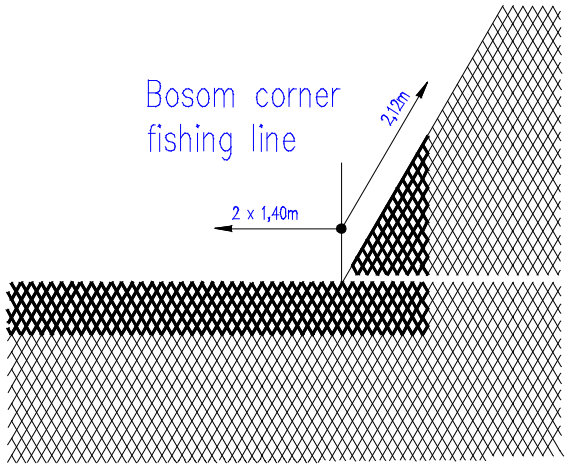

Details for trawl TV3-520x80

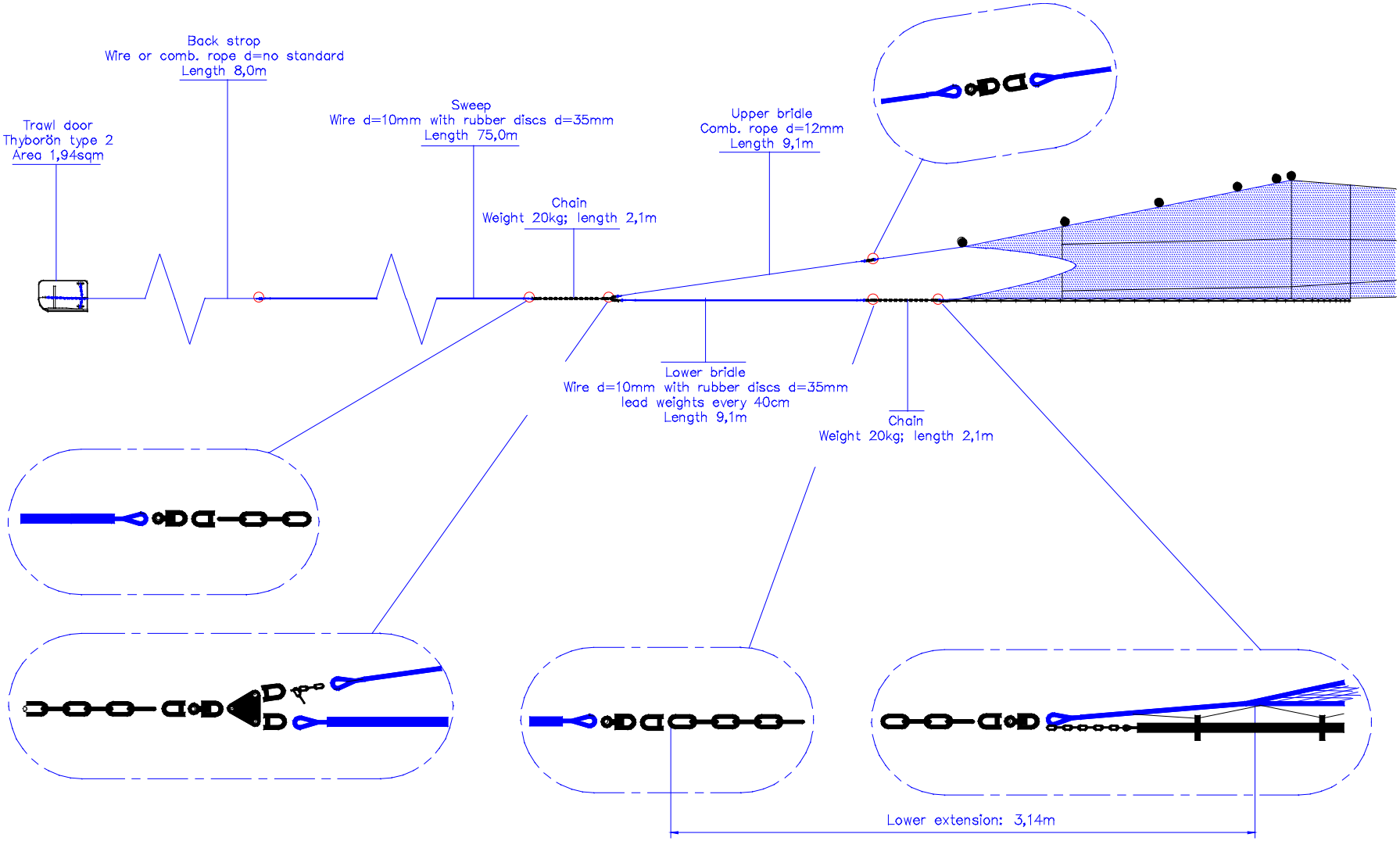

Rigg details (1) for trawl TV3- 520x80

Float positions

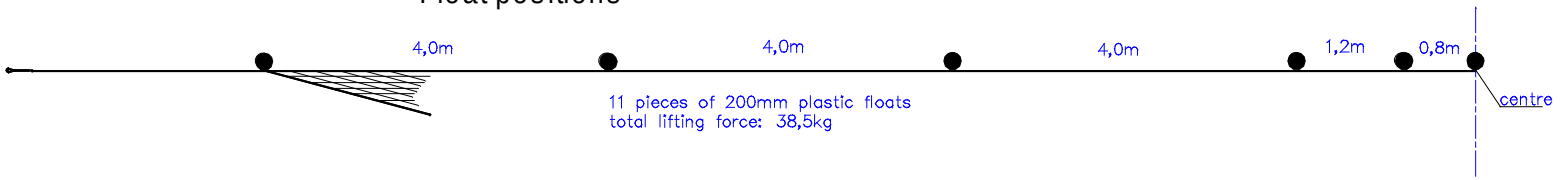

Footrope

0 – 2,5m:	100mm rubber discs with side hole, 100mm distance
2,5 – 6m:	100mm rubber discs with side hole, distance increasing from 100 to 500mm
6 – 16,3m:	100mm rubber discs with side hole, 500mm distance
0 – 16,3:	12/14mmrubber or plastic tube and 45mm rubber discs filling all the space between the large discs

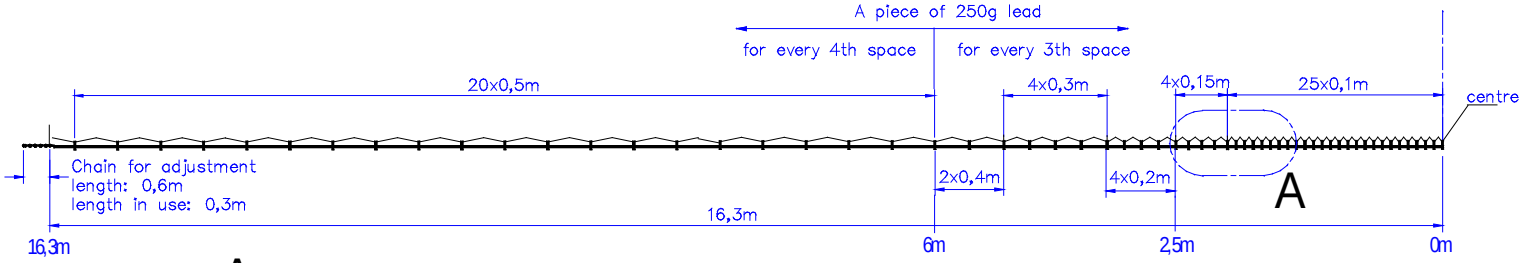

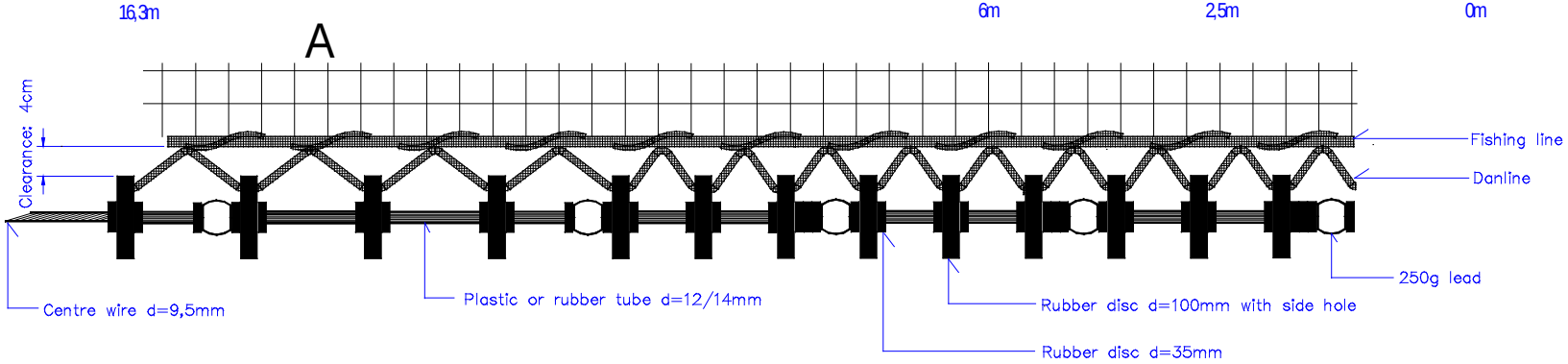

Rigg details (2) for trawl TV3- 520x80

Section 1

1B1	1A1	1A2	1B2	1C1	1C2
8,22m	8,10m	8,10m	8,22m	8,28m	8,28m

Section 2

2B1	2A	2B2	2C1	2C2
2,04m	2,04m	2,04m	2,12m	2,12m

Section 3

3B1	3A	3B2	3C
1,96m	1,96m	1,96m	2,12m

Section 4

4B1	4A	4B2	4C
7,92m	7,92m	7,92m	8,00m

Section 5

5B1	5A	5B2	5C
3,96m	3,96m	3,96m	4,00m

Section 6

6B1	6A	6B2	6C
3,92m	3,92m	3,92m	3,96m

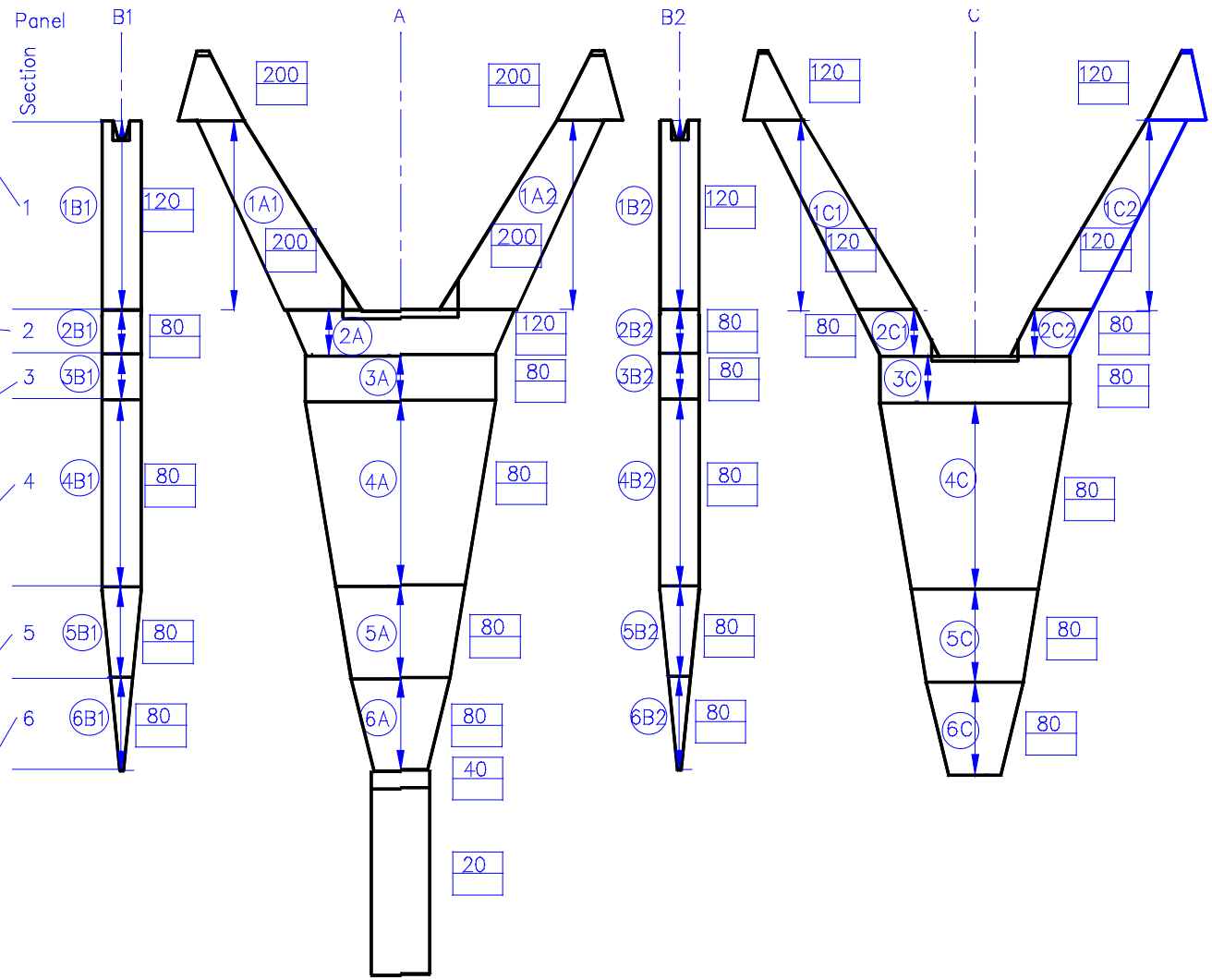

Check list for trawl TV3-520x80

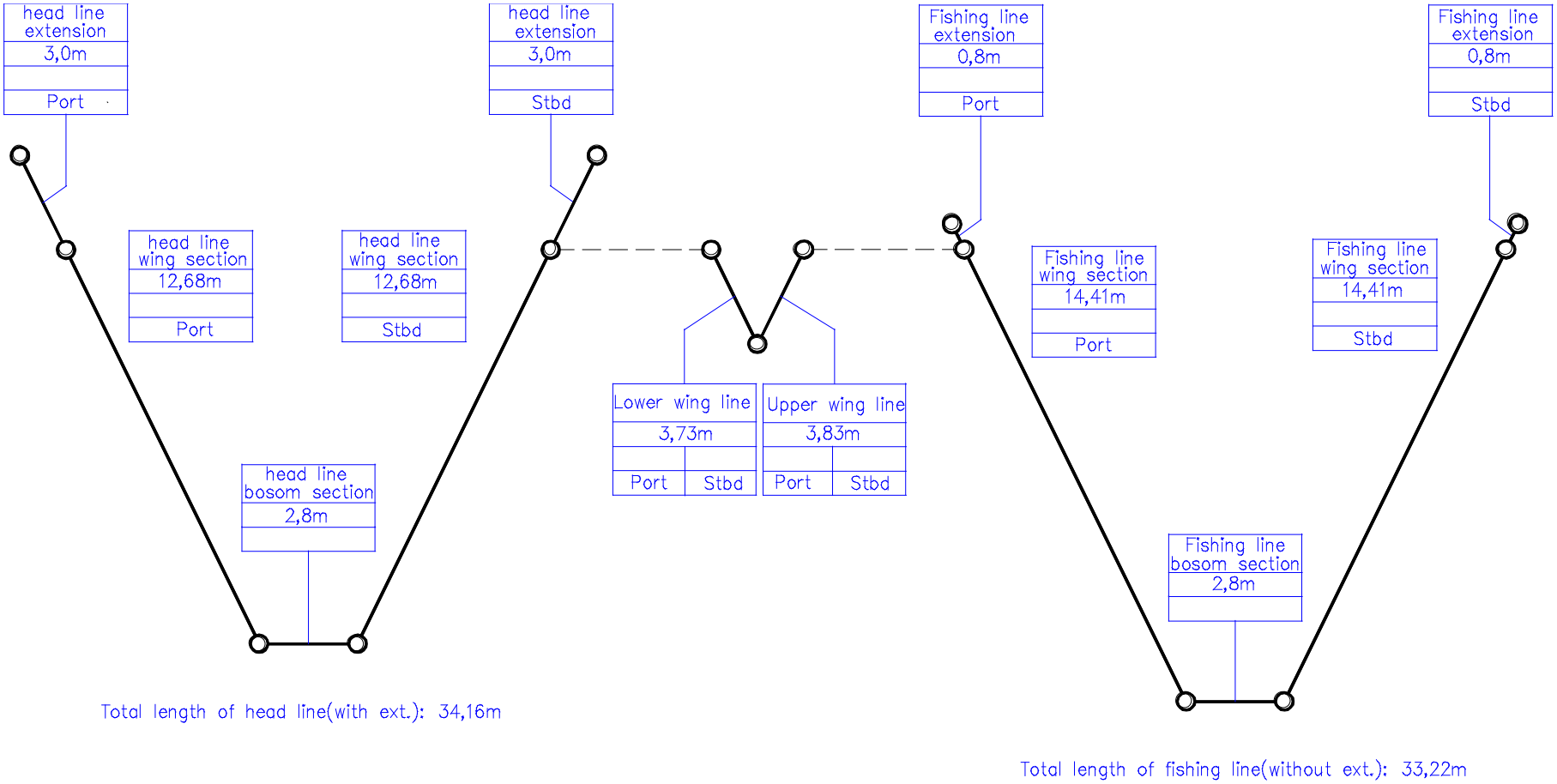

Check list for frame ropes of trawl TV3-520x80

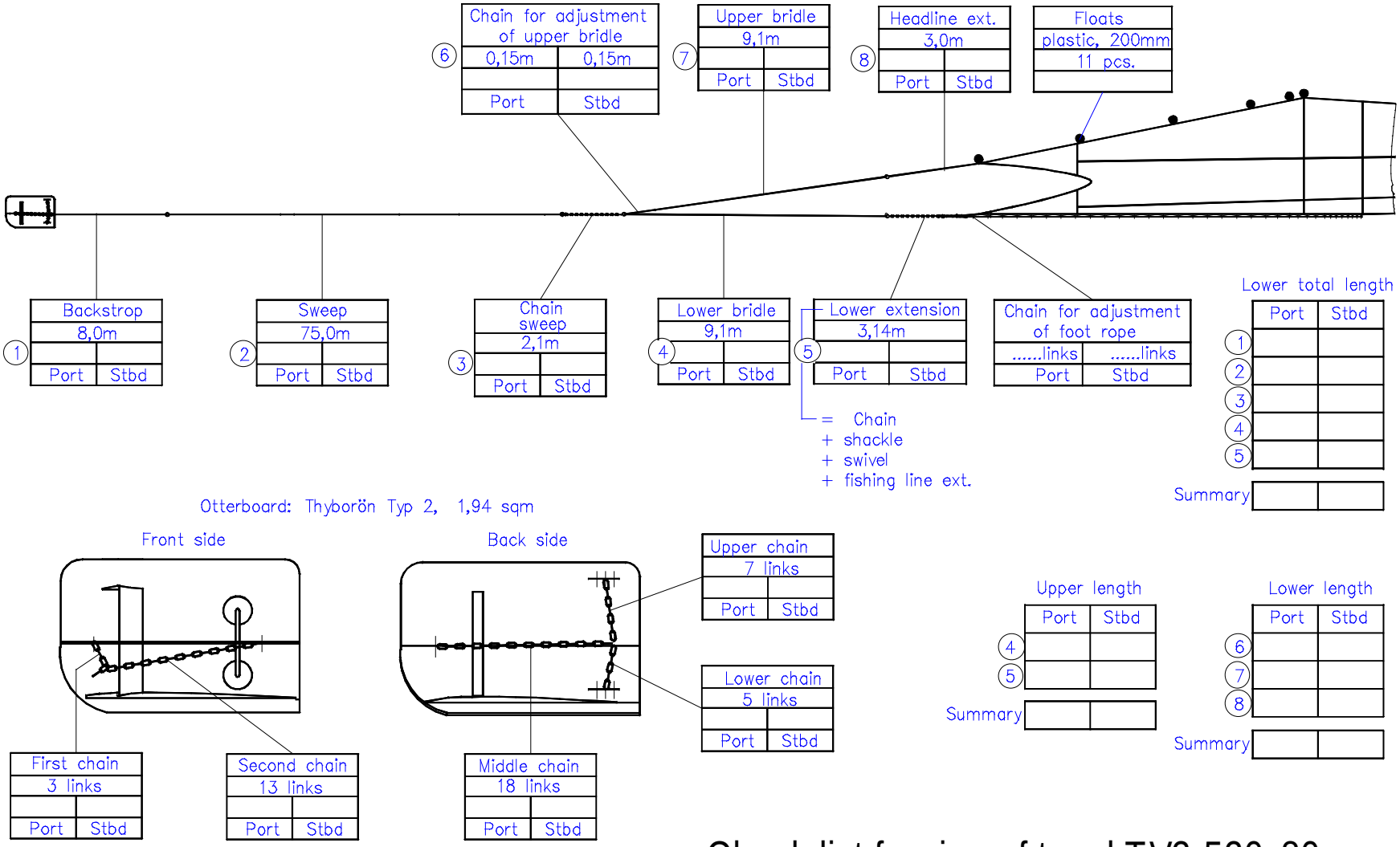

Check list for rigg of trawl TV3-520x80

TV-3 520#

Check Guide

International Standard Trawl for Baltic Demersal Surveys

In order to maintain the properties and performance of the net it must be checked at regular intervals.

Before every cruise

Length of net sections

The trawl consists of four panels: top, bottom and side panels. Each panel has several sections. It is necessary to check the relative length of each netting section. They are all compared with the corresponding sections in the other panels in the way that the top and bottom panel sections are checked against the side panel sections.

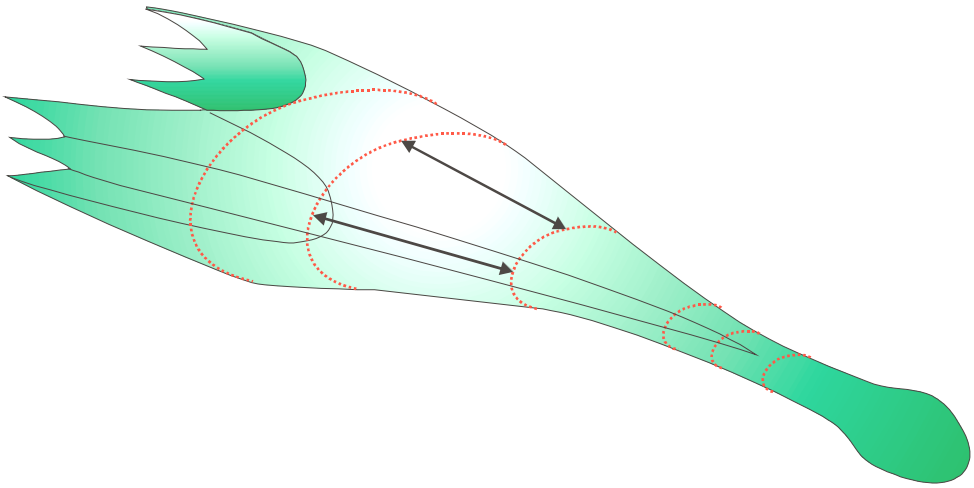

Comparison of the lengths of two sections from the top and side panels – indicated by arrows: Approx. 10 meshes from around the centre line of the top panel is hold against approx. 10 meshes from around the centre line of the side panel.

The best method to compare two sections is to let two persons – one in each end of the section – take around 10 meshes from the centre line of one section in one hand and hold it against 10 meshes from the centre line of the other section in the other hand. The sections must then be stretched and the difference in length observed.

- Length of side and top panel sections must be equal;
- Length of bottom panel sections must be about 1 mesh longer than corresponding side panel sections.

The procedure is repeated for each section. In case the difference differs more than 4 cm (or half a mesh) from the specified difference, a skilled netmaker should be consulted to evaluate a possible shortening

Length of wings

The specified shortening of the side wing shall be measured from the joining round between the wing and arms to the eye at the end of the headline, footrope and breastline extensions respectively.

- The length of side wing must be 0.65 meter shorter than the top wing and bottom wing.

Length of groundrope

The length of the groundrope and fishing line must be compared by holding the two together. The length is adjusted by means of the adjustment chain on the groundrope.

- The groundrope must be two links shorter than the fishing line (equal to shortening the groundrope one link in each side).

Annex 5: Manual for the construction and use of the International Standard Trawls for Baltic Demersal Surveys, TV-3#930

TV-3 930 meshes

References

Anonymous 1998. Report of the Baltic International Fish Survey Working Group. Karlskrona, 8 – 13 June 1998. ICES CM 1998/H:4.

Contents

Two trawls are specified as International Standard Trawls for Baltic Demersal Surveys:

- TV3 930 meshes in the circumference for vessels more than 600 KW (This manual)
- TV3 520 meshes in the circumference for vessels of less than 600 KW (Separate manual)

This manual includes:

- Parts list
- A plot of the specifications of the net
- Detailed drawings of selected items
- Check lists
- Check guide
- Optional stone excluding panel for lower panel

Notes to the construction

The nets should be made from good quality polyethylene netting, except the codend that is made from polyamide. It will however not be possible for the net manufacturer always to obtain sheet netting of exactly the same length as specified in this manual. Thorough care must be taken to obtain materials with properties as close as possible to the ones specified here. The denomination of the sheet netting differs from manufacturer to manufacturer, but the following table should give the most common 'translations'.

	Chemical composition	Construction	Diameter	International denomination	Trade 'name'
Front part and front belly	PE	Braided	3.0	500/36	3/12
Central belly	PE	Twisted	1.71	500/24	3/8
Rear belly and codend	PA	Twisted	1.32	210/30	no. 10

IMPORTANT: It is very important to maintain the original relationship (hanging ratio, difference) between the netting lengths and the framing ropes along the headline and footrope. So if the headline in a section shall be 10% longer than the net according to this manual, it must be so, also if the dimensions of the net differ from the present specification.

Operation of the standard trawls

Towing speed
The towing speed should be 3.0 knots.

Warp length
It is recommended to use the following table for finding the correct warp length to be used at various fishing depths. The table gives different warp lengths for a range of warp constructions given by diameter and weight per metre.

The tables are calculated based on the specifications of the net and doors. They should be taken as a starting point. Preliminary tests during the year 2000 suggest that the warp length should be 50 metres more than the table specifies. Also it is recommended that the warps length should not less than 200 metres as it will decrease the door spread too much.

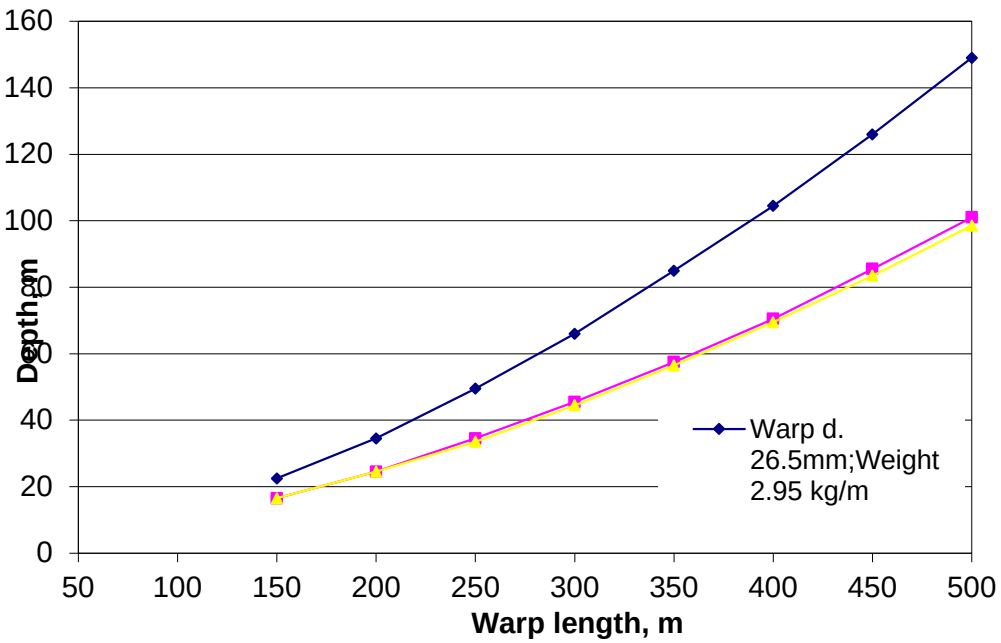

(The figures have been obtained using software developed at Kaliningrad State Technical University, by Professor Rosenstein).

Trawl geometry

The shape of the trawl is depending on many parameters of which some are being standardized here by using the same procedures. Nevertheless, when working on different depths and using different lengths of towing warp the door spread will change, and therefore also the height of the net. Table 2 below shows the relationship between the basic geometric parameters for the standard trawl using the specified 118.1 m distance between trawl door and the net (8 + 75 + 3.6 + 27.5 + 4 m). They are based on model measurements and full-scale measurements at sea using acoustic measuring devices.

Door spread, m	60	70	80	90
Trawl vertical opening, m	7.3	6.7	6.1	5.6
Headline spread, m	no data	22.5	26	no data
Angle of sweeps, degrees	11	12	14	16

If trawl monitoring instruments (like SCANMAR) are used on the trawl the table can be used to check if the trawl is working properly. Care should be taken that the instruments are neutrally buoyant in water.

Maintenance

The net should be regularly checked for wear and tear and all damages shall be repaired upon discovery.

The net will eventually stretch under normal fishing conditions. It is important for its fishing performance and for maintaining a constant fishing efficiency at regularly intervals to check the length of the bridles, sweeps, extensions, netting sections etc.

The overall status for the net should be checked at the beginning of every cruise. Every year a detailed check should be made of all net and rope dimensions. (The interval between checks is depending on the time the net is in use. An annual check is regarded sufficient if the net is used for one or two normal surveys a year). The special checklists attached to this manual can be used.

IMPORTANT: Special attention should be given to ensure that the relationship (difference) between the length of the netting sections in the top and bottom panels are maintained. Lower sections are a half mesh or a full mesh longer than the corresponding top section. These differences have to be maintained by monitoring the net at regular intervals. In the case that the difference is too small the particular bottom section must be shortened be cutting up the joining round and cut away half a mesh or a full mesh from the length.

Also the relationship between the length of the framing ropes and the nets in the wings and arms must be retained. The percentage the net is stretched on the headline and footrope is given in the specification. When the netting after a period of use loses its stretch, the headline and footrope must be cut off, the net in the wings and arms shortened and remounted on the ropes again.

TV-3#930

Parts List

International Standard Trawl for Baltic Demersal Surveys

Note: In this list the term weight is used for mass and the unit is kg.

	No	Item	Description	Size
Trawl doors				
	2	Doors	Cambered V-doors, Type: Thyborøn Trawl Doors Type 2	4.35 m² Weight 520 kg
		Front Chain	Recommended setting: 23 links using link 6 for warp attachment	Inside length of link 100 mm
		Back Chain	Top chain: 10 links Horizontal chain: 24 links Bottom chain: 9 links	Inside length of link: 80 mm
	2	Back strop	Wire or combination rope	Ø = no standard Length 8 m
Sweeps				
	2	Sweep	Combination rope (light)	Ø = 40 mm Length 75 metre Weight per metre 1.60 kg
Chain between sweeps and bridles				
	2	Chain	Iron	Length 3.02 m Weight: 50 kg
Bridles				
	4	Upper and centre bridles	Combination rope	Ø = 18 mm Length: 27.5 m Weight per metre 0.46 kg
	2	Lower bridle	Wire Rubber discs	Ø = 16 mm Length 27,5 m Weight per metre 0.95 kg Ø = 50 mm
Floats				
	(25)	Floats	(11 litre (same as 280 mm, 11 inch) plastic floats)	Total lifting force: 212.5 kg equivalent to 25 pcs. of 280 mm plastic floats)
Headline and Fishing line				
	1	Headline	Combination rope, stainless	Ø = 16 mm Length 67.60 m incl. extension Weight per metre 0.39 kg
	1 2 2 2 2	Fishing line	Combination rope, stainless Chain weight at bosom corner Chain weight at mid-arm Chain weight at wingend Semi-spherical rubber bunt bobbins	Ø = 16 mm Length 69.64 m incl extension and weight Weight per metre 0.39 kg 14 kg each side 14 kg each arm Length 3.02 m Weight: 50 kg each wingend Ø = 230 mm
Footrope				
		Centre Wire	Wire, stainless steel	Ø = 13 mm Weight per metre 0.66 kg
		Large rubber discs		Ø = 200 mm
		Small rubber discs		Ø = 150 mm

	No	Item	Description	Size
		Filling	rubber discs	Ø = 45 mm
		Rope to mount the gear	Combination rope mounted in bights on the fishing line and through the rubber discs	Ø = 12 mm Weight per metre 0.20 kg The length of the bights shall make the disc periphery hang 4 cm from the fishing line
		Wire lockers	To mount the wire to the fishing line	
Attachments				
		Lazy deckie	No standard	
		Tackle strop	No standard	

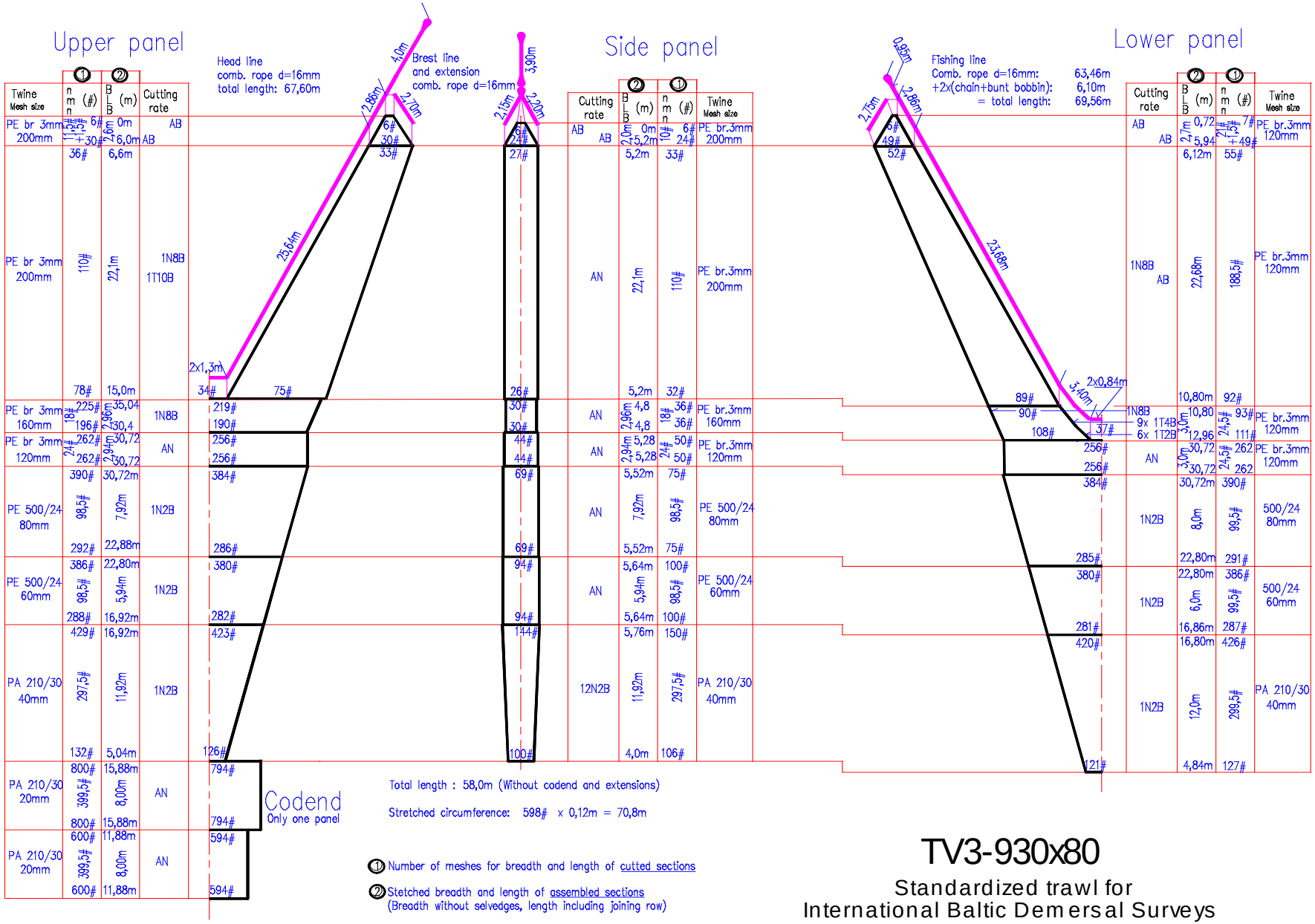

TV3-930x80

Standardized trawl for
International Baltic Demersal Surveys

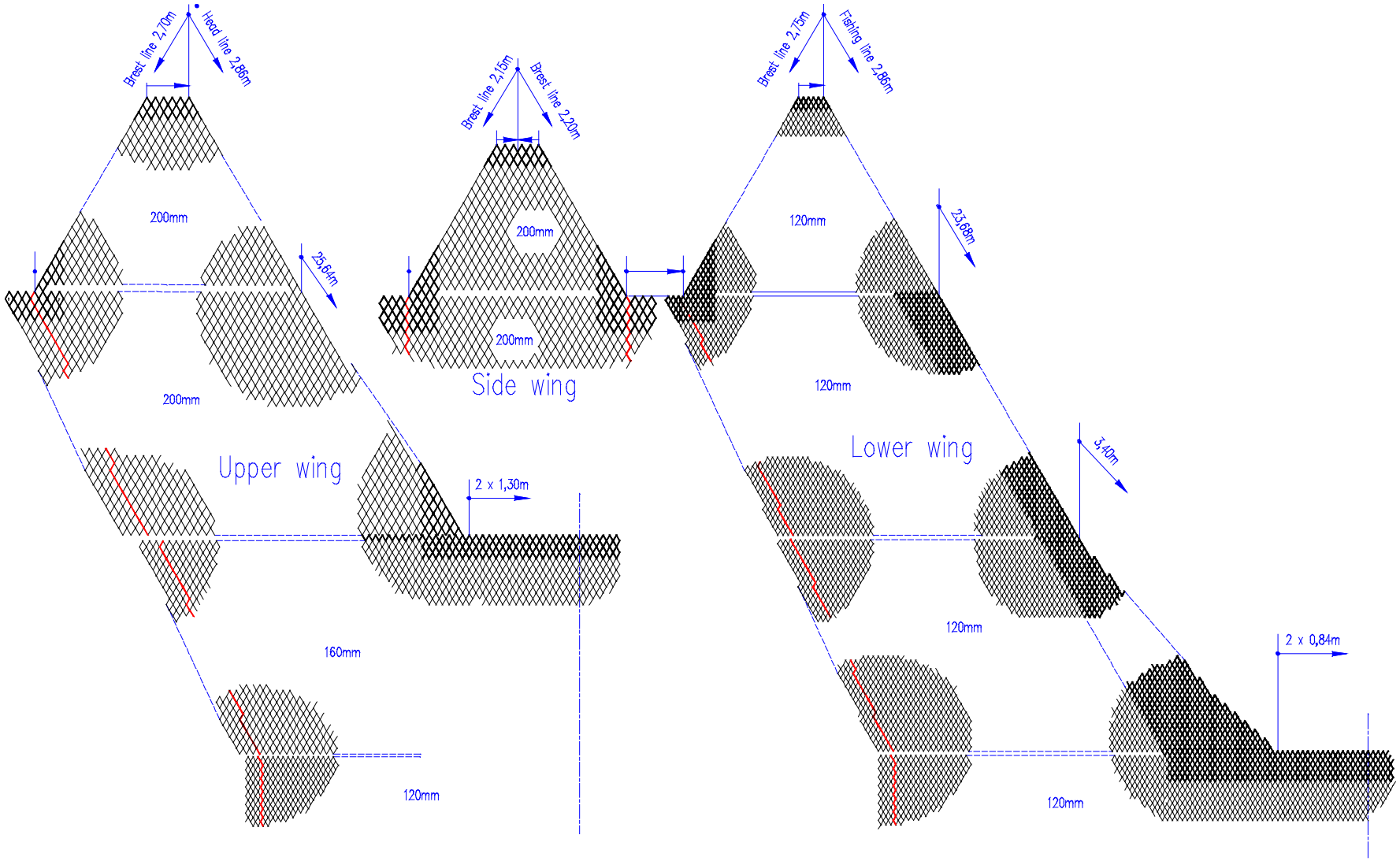

Details for trawl TV3-930x80

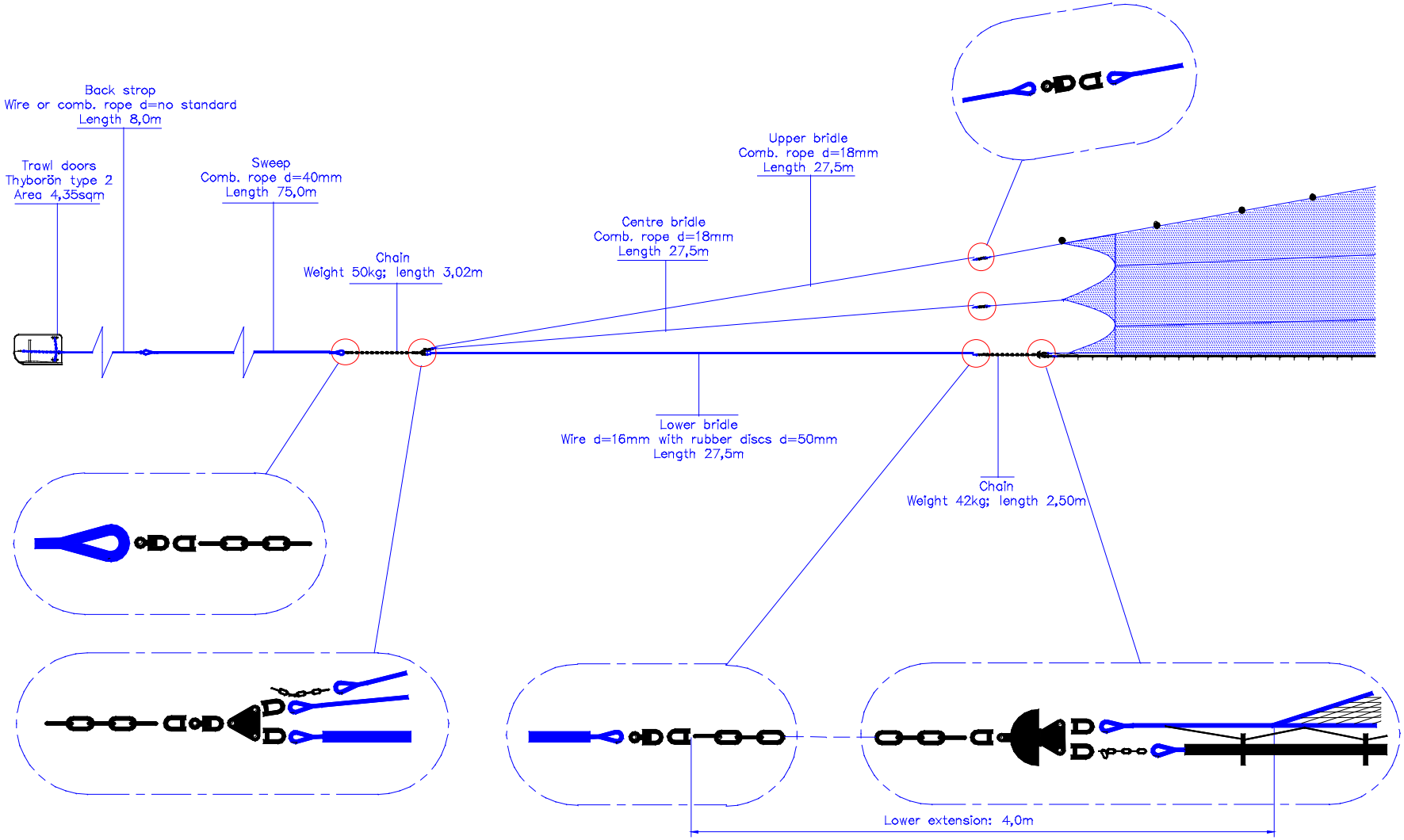

Rigg details (1) for trawl TV3- 930x80

Float positions

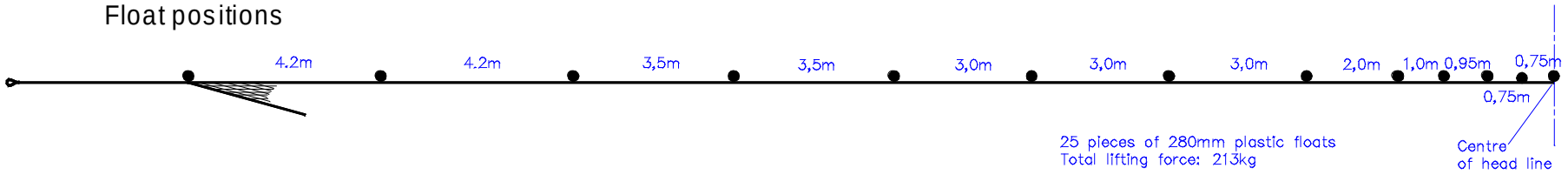

Normal standard footrope

0 – 3m:	200mm rubber discs with side hole, 100mm distance
3– 6m:	200mm rubber discs with side hole, distance increasing from100mm to 500mm
6 – 31,4m:	150mm rubber discs with side hole, 500mm distance
0 – 31,4m:	45mm rubber discs filling all the space between the large discs

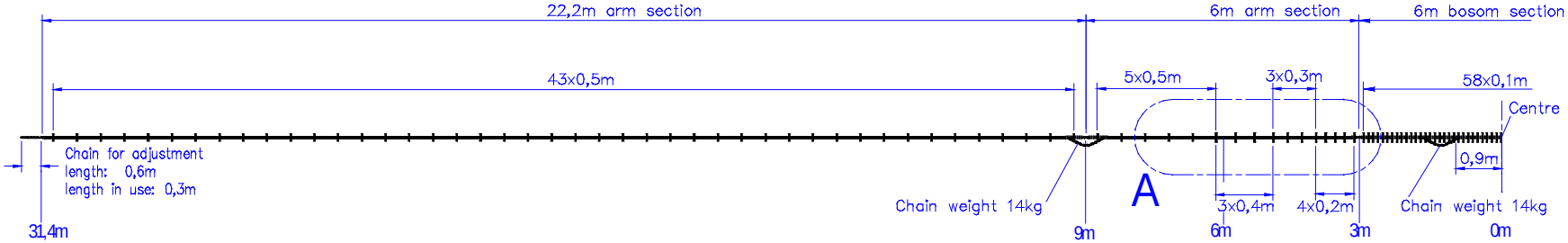

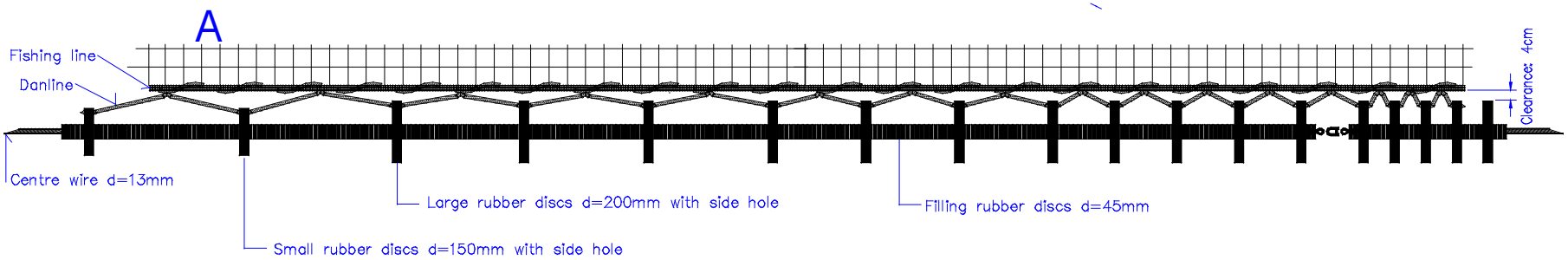

Rigg details (2) for trawl TV3- 930x80

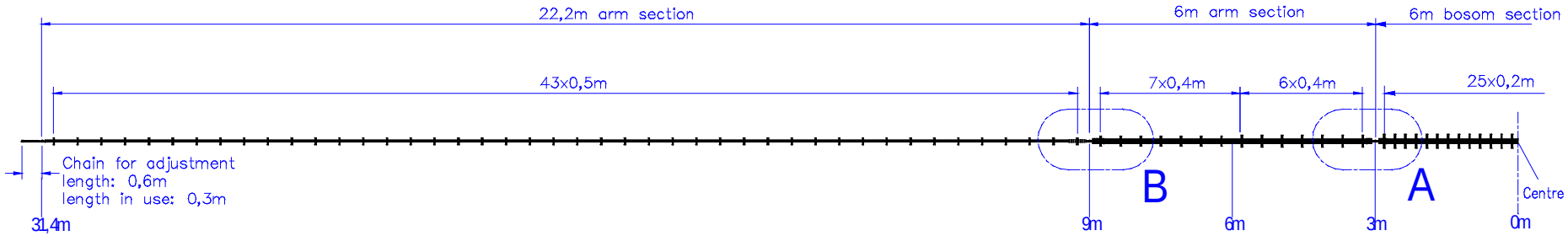

Hard bottom footrope

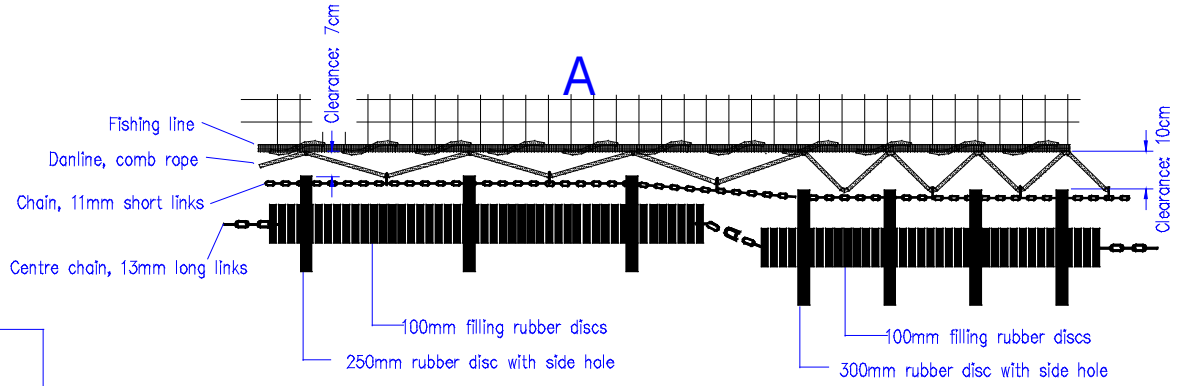

0 – 3m:	300mm rubber discs with side hole, 200mm distance
3 – 6m:	250mm rubber discs with side hole, 400mm distance
6 – 9m:	200mm rubber diiscs with side hole, 400mm distance
0 – 9m:	100mm rubber discs filling all the spaces between the large discs
9 – 31,4m:	150mm rubber discs with side hole, 500mm distance
9 – 31,4m:	45 mm rubber discs filling all the spaces between the large discs

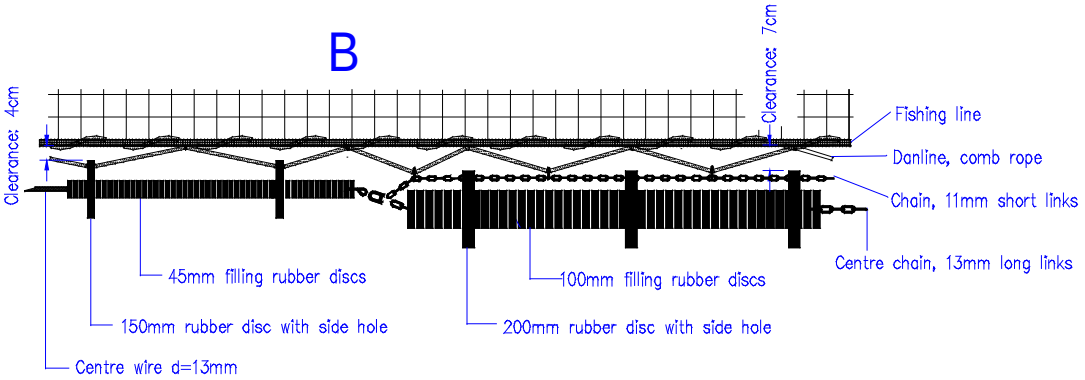

Rigg details (3) for trawl TV3- 930x80

Section 1

1B1	1A1	1A2	1B2	1C1	1C2
22,10m	22,10m	22,10m	22,10m	8,28m	8,28

Section 2

2B1	2A	2B2	2C1	2C2
2,96m	2,96m	2,96m	3,00m	3,00m

Section 3

3B1	3A	3B2	3C
2,94m	2,94m	2,94m	3,00m

Section 4

4B1	4A	4B2	4C
7,92m	7,92m	7,92m	8,00m

Section 5

5B1	5A	5B2	5C
5,94m	5,94m	5,94m	6,00m

Section 6

6B1	6A	6B2	6C
11,92m	11,92m	11,92m	12,00m

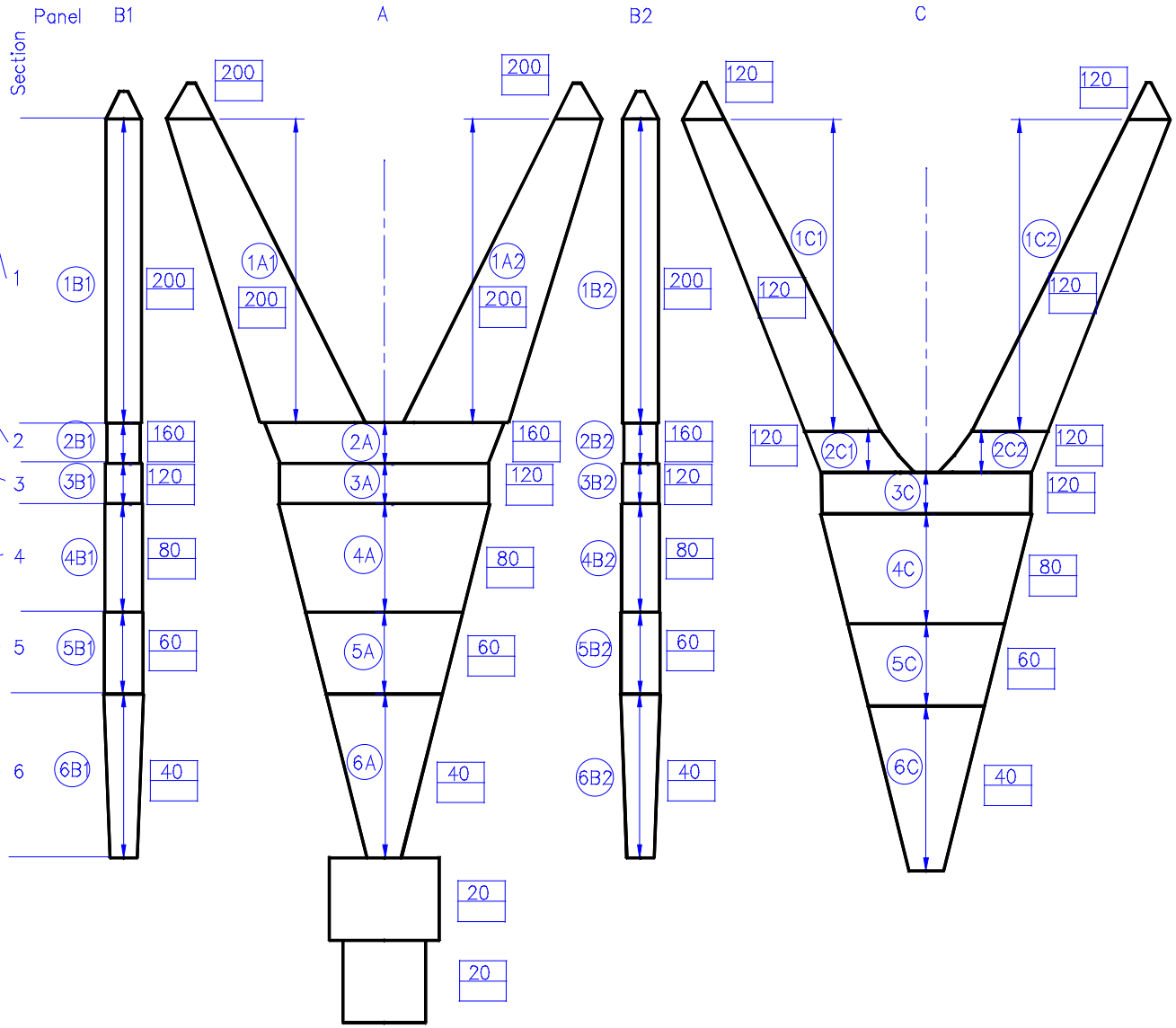

Check list for trawl TV3-930x80

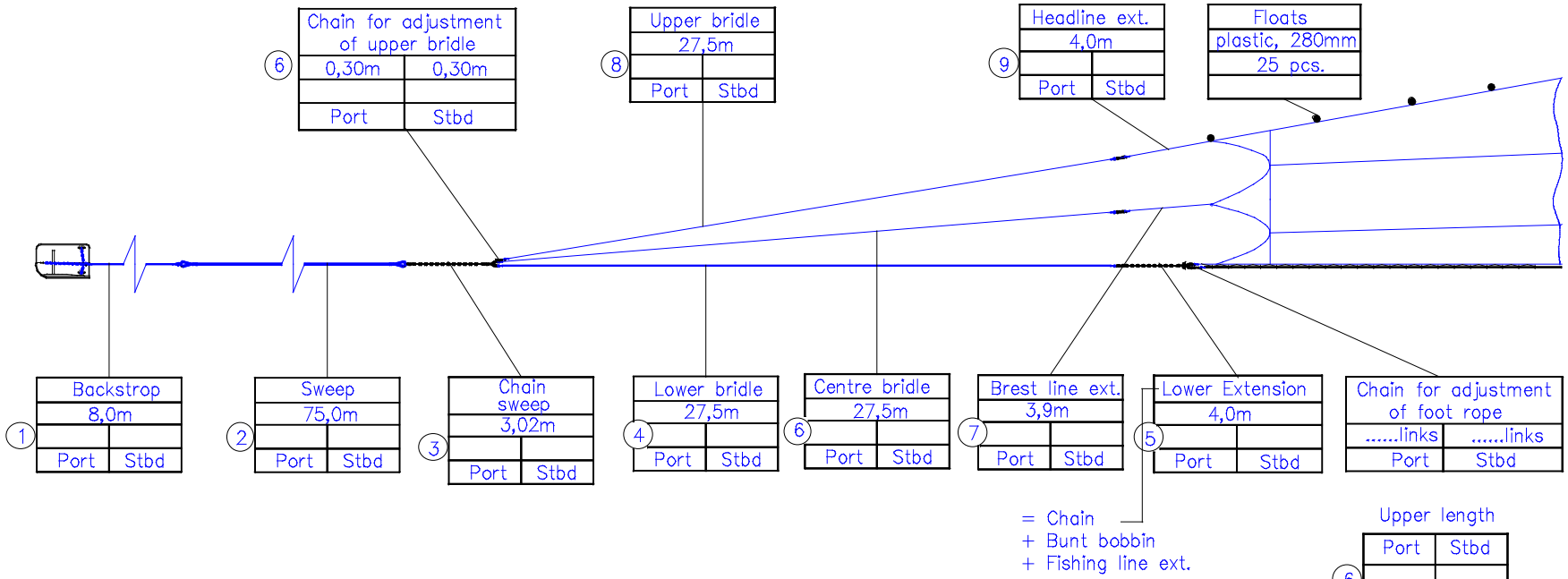

Otterboard: Thyborön Typ 2; 4,35sqm

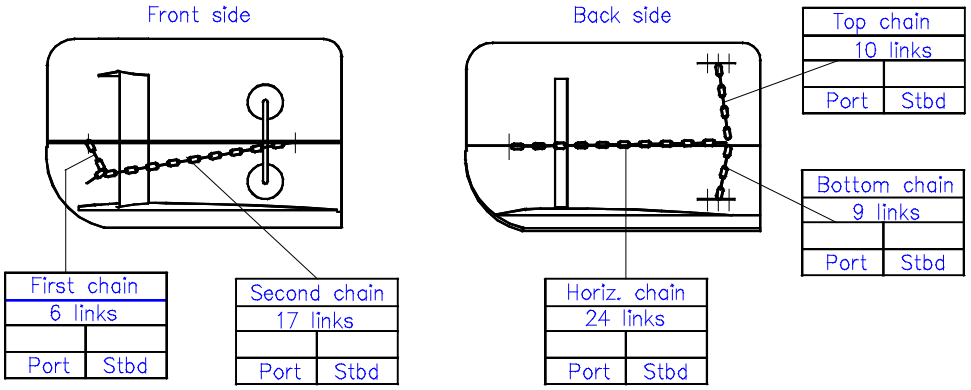

Lower total length

	Port	Stbd
1		
2		
3		
4		
5		
Summary		

Upper length

	Port	Stbd
6		
8		
9		
Summary		

Centre length

	Port	Stbd
6		
7		
Summary		

Lower length

	Port	Stbd
4		
5		
Summary		

Check list for rigg of trawl TV3-930x80

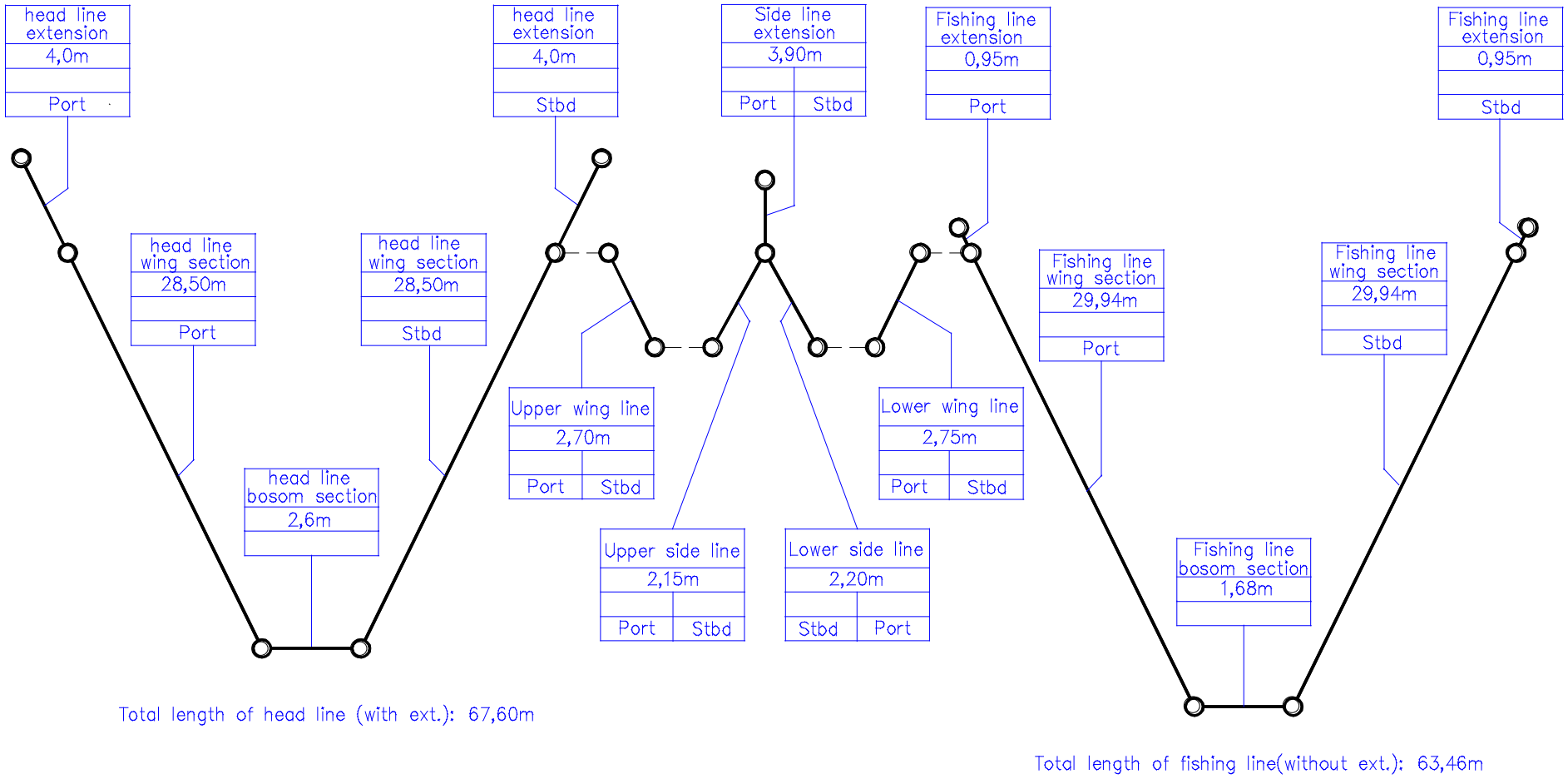

Total length of head line (with ext.): 67,60m

Total length of fishing line(without ext.): 63,46m

Check list for frame ropes of trawl TV3-930x80

TV-3#930

Check Guide

International Standard Trawl for Baltic Demersal Surveys

In order to maintain the properties and performance of the net it must be checked at regular intervals.

Before every cruise

Length of net sections

The trawl consists of four panels: top, bottom and side panels. Each panel has several sections. It is necessary to check the relative length of each netting section. They are all compared with the corresponding sections in the other panels in the way that the top and bottom panel sections are checked against the side panel sections.

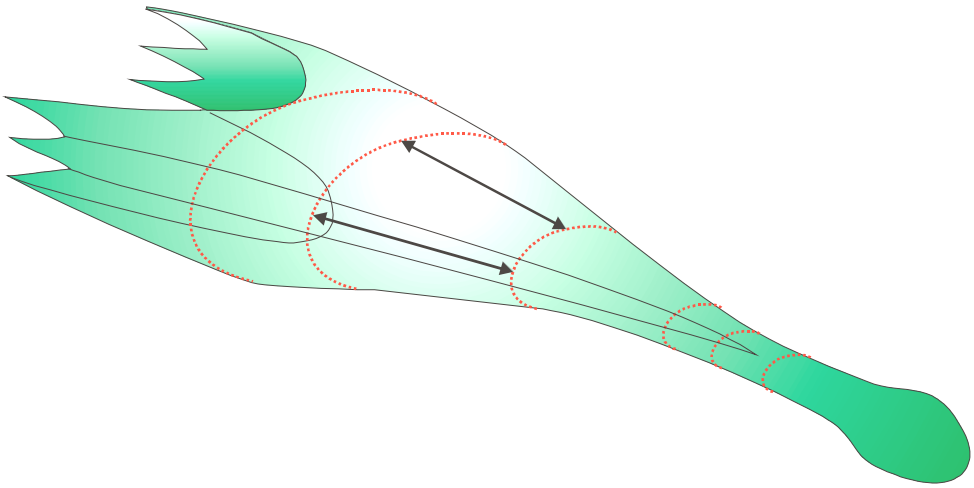

Comparison of the lengths of two sections from the top and side panels – indicated by arrows: Approx. 10 meshes from around the centre line of the top panel is hold against approx. 10 meshes from around the centre line of the side panel.

The best method to compare two sections is to let two persons – one in each end of the section – take around 10 meshes from the centre line of one section in one hand and hold it against 10 meshes from the centre line of the other section in the other hand. The sections must then be stretched and the difference in length observed.

- Length of side and top panel sections must be equal;
- Length of bottom panel sections must be about 1 mesh longer than corresponding side panel sections.

The procedure is repeated for each section. In case the difference differs more than 4 cm (or half a mesh) from the specified difference, a skilled netmaker should be consulted to evaluate a possible shortening.

Length of wings

The specified shortening of the side wing shall be measured from the joining round between the wing and arms to the eye at the end of the headline, footrope and breastline extensions respectively.

- The length of side wing must be 0.65 meter shorter than the top wing and bottom wing.

Length of groundrope

The length of the groundrope and fishing line must be compared by holding the two together. The length is adjusted by means of the adjustment chain on the groundrope.

- The groundrope must be two links shorter than the fishing line (equal to shortening the groundrope one link in each side).

Annex 6: Maturity key

KEY	MATURITY STAGE	MALE	FEMALE
1	Virgin	Testes very thin translucent ribbon lying along an unbranched blood vessel. No sign of development.	Ovaries small, elongated, whitish, translucent. No sign of development.
2	Maturing	Development has obviously started, colour is progressing towards creamy white and the testes are filling more and more of the body cavity but sperm cannot be extruded with only moderate pressure.	Development has obviously started, eggs are becoming larger and the ovaries are filling more and more of the body cavity but eggs cannot be extruded with only moderate pressure.
3	Spawning	Will extrude sperm under moderate pressure to advanced stage of extruding sperm freely with some sperm still in the gonad.	Will extrude eggs under moderate pressure to advanced stage of extruding eggs freely with some eggs still in the gonad.
4	Spent	Testes shrunken with little sperm in the gonads but often some in the gonoducts, which can be extruded under light pressure.	Ovaries shrunken with few residual eggs and much slime.
5	Resting	Testes firm, not translucent, showing no development.	Ovaries firm, not translucent, showing no development.
6	Abnormal	Fish with abnormal gonads, e.g. as a result of disease, atresia or intersexes	Fish with abnormal gonads, e.g. as a result of disease, atresia or intersexes

Resting (see remarks in ICES CM 1997/J:4, Section 2.5)

Possibilities to classify the maturity stages of the BITS key:

MATURITY STAGE	PURPOSE OF CLASSIFICATION	
(BITS code)	Estimation of	
	spawning stock size	sexual maturity
1. VIRGIN	Immature (non-spawner)	immature
2. MATURING	mature (spawner)	mature
3. SPAWNING	mature (spawner)	mature
4. SPENT	mature (spawner)	mature
5. RESTING	'immature' (non-spawner)	mature
6. ABNORMAL	(non-spawner)	(non-spawner)

Annex 7: Conversion tables for maturity keys

The table converts the codes of the national maturity keys into the codes of the BITS key for cod.

COUNTRY	BITS	DENMARK	ESTONIA	FINLAND	GERMANY	LATVIA	POLAND	RUSSIA	SWEDEN
Species	All	Cod	All		Cod	Cod	Cod	Cod	Cod
Source	ICES (1997)	Modified from	Kiselevich (1923)		Modified from	Kiselevich (1923)	Maier (1908)	Sorokin (1957, 1960)	Modified from
		Maier (1908)	Pravdin (1966)	not available	Maier (1908).	Pravdin (1966)	Chrzan (1951)	Modified by Alekseev, Alekseeva (1996)	Maier (1908)
		Berner (1960)			Berner (1960)				
Maturity stage	Code								
([1])									
VIRGIN	1	I,II	I		I	Juvenis, II	I	Juv., II	I
(immature)									
MATURING	2	III–V	II–IV		III–V	III, IV	III–V	III, IV	III–V
(mature)									
SPAWNING	3	VI,VII	V		VI,VII	V	VI,VII	V, VI (V),	VI
(mature)								VI (IV)	
SPENT	4	VIII	VI		VIII	VI	VIII	VI	VII,VIII
(mature)									
RESTING	5	IX,X	II		II	II	II	VI – II	II
(mature/									
immature[2])									

[1]sexual maturity for estimating the proportion of spawners.

[2]should be used when the investigation was during the prespawning and early spawning time (still no spent individuals).

Individuals will not contribute to the spawning stock in the present year.

The table converts the codes of the national maturity key into the codes of the BITS key for herring.

COUNTRY	BITS	DENMARK	ESTONIA	FINLAND	GERMANY	LATVIA	POLAND	RUSSIA	SWEDEN
Species	All		All		Herring	Herring	Herring	Herring	Herring
Source	ICES (1997)		Kiselevich (1923)		Modified from	Kiselevich (1923)	Modified from Maier scale.	Kiselevich (1923)	ICES (1962)
			Pravdin (1966)	not available	Heincke (1898)		Popiel (1955)		
							Strzyzewska (1969); Grygiel & Wyszynski (2002, 2003)		
Maturity stage	Code								
([1])									
VIRGIN	1		I		I	I	I,II	Juv., II	I,II
(immature)									
MATURING	2		II–IV		III,IV	III, IV	III–V	III, IV	III–V
(mature)									
SPAWNING	3		V		V,VI	V	VI,VII	V	VI
(mature)									
SPENT	4		VI		VII,VIII	VI	VIII	VI	VII
(mature)									
RESTING	5		II		II, IX	II (VI)	-	VI (II)	VIII
(mature/									
immature[2])									

[1]sexual maturity for estimating the proportion of spawners.

[2]should be used when the investigation was during the prespawning and early spawning time (still no spent individuals).

Individuals will not contribute to the spawning stock in the present year.

The table converts the codes of the national maturity key into the codes of the BITS key for sprat.

COUNTRY	BITS	DENMARK	ESTONIA	FINLAND	GERMANY	LATVIA	POLAND	RUSSIA	SWEDEN
Species	All		All		Sprat	Sprat	Sprat	Sprat	
Source	ICES(1997)	No estimations	Kiselevich (1923)		Rechlin	Aleksjeev,	Maier (1908),	Alekseev,	
			Pravdin (1966)	not available	(unpublished)	Aleksjeeva (1996)	Elwertowski (1957); Grygiel & Wyszynski (2002, 2003)	Alekseeva (1996)	not available
Maturity stage	Code								
([1])									
VIRGIN	1		I		I	I	I	Juv., II	
(immature)									
MATURING	2		II–IV		III,IV	III, IV, VI (III)	III–V	III, IV	
(mature)						VI (IV)			
SPAWNING	3		V		V,VI	V, VI (V)	VI,VII	V, VI (V),	
(mature)								VI (IV)	
SPENT	4		VI		VII,VIII	VI	VIII	VI	
(mature)									
RESTING	5		II		II	II	II	VI (II)	
(mature/									
immature[2])									

[1]sexual maturity for estimating the proportion of spawners (mature individuals).

[2]should be used when the investigation was during the prespawning and early spawning time (still no spent individuals)

Individuals will not contribute to the spawning stock in the present year.

The table converts the codes of the national maturity key into the codes of the BITS key for flatfish.

COUNTRY	BITS	DENMARK	ESTONIA	FINLAND	GERMANY	LATVIA	POLAND	RUSSIA	SWEDEN
Species	All		All		Flatfish		Flatfish	Alekseev,	
Source	ICES (1997)	not available	Kiselevich (1923)	not available	Maier (1908)	Kiselevich (1923),	Maier (1908)	Alekseeva (1996)	not available
			Pravdin (1966)			Pravdin (1966)			
Maturity stage	Code								
([1])									
VIRGIN	1		I		I	Juvenis, II	I	Juv., II	
(immature)									
MATURING	2		II–IV		III–V	III, IV	III–V	III, IV	
(mature)									
SPAWNING	3		V		VI,VII	V	VI,VII	V, VI (V),	
(mature)								VI (IV)	
SPENT	4		VI		VIII	VI	VIII	VI	
(mature)									
RESTING	5		II		II	II	II	VI (II)	
(mature/									
immature[2])									

[1] sexual maturity for estimating the proportion of spawners (mature individuals).

[2] should be used when the investigation was during the prespawning and early spawning time (still no spent individuals).

Individuals will not contribute to the spawning stock in the present year.

Annex 8: Alpha codes for countries and ships

COUNTRY	ICES CODE[1])	SHIP´S NAME	BITS CODE
Denmark	DEN	Dana (old)	DAN
		Dana (new)	DAN2
		J.C. Svabo	JCS
		Havfisken	HAF
		Havkatten	HAK
Germany	GFR	Anton Dohrn (old)	AND
		Anton Dohrn (new)	AND2
		Solea	SOL
		Walther Herwig	WAH
		Clupea	CLP
		Eisbär (old)	EIS
Sweden	SWE	Thesis	THE
		Skagerrak	SKA
		Argos	ARG
		Ancylus	ACY
Estonia	EST	Koha	KOH
		Solveig Charter	SLG CEV
Finland	FIN		
Latvia	LAT[1])	Baltijas Petnieks (old)	BPE
		Commercial Latvia Vessel	CLV
Poland	POL	Baltica	BAL
Russia	RUS	ATLANTIDA	ATLD
		ATLANTNIRO	ATL
Lithuania	LTU[1])	Darius	DAR

Note [1]). Country code for Latvia and Lithuania codes refer to the FAO, ISO Alpha 3 code system.

Annex 9: Alphanumeric codes for demersal trawl gears

TRAWL SPECIFICATION	TRAWL POPULAR NAME	RESEARCH VESSEL
DT	Russian bottom-trawl	Monokristal
LPT	Latvian Pelagic Trawl	Baltijas Petnieks, Zvezda Baltiki
LBT	Latvian Bottom-trawl	Baltijas Petnieks
GOV	Grand Overture Verticale	Argos, Dana
DBT	Danish bottom-trawl	Dana
EXP	Danish winged bottom-trawl	Dana
SON	Sonderborg trawl	Clupea, Solea
H20	Herring ground trawl (H20/25)	Solea, Eisbär
P20	Herring bottom-trawl (P20/25)	Commercial Vessel, Baltica
TV1	Large TV trawl	Havfisken
TV2	Small TV trawl	Havkatten
FOT	Fotö bottom-trawl	Argos
LCT	Lithuanian cod trawl	Darius
ESB	Estonian small bottom-trawl	Koha
HAK	Hake-4M	AtlantNIRO, Atlántida
CHP	Cod Hopper	Solea
MWT	Mid water trawl 664	Solea
TV3	TV trawl	All vessels
TVL	TV3 930 meshes	All vessels participating in the BITS besides vessels using TVS
TVS	TV3 520 meshes	Havfisken, Solea, Solveig, CEV(Estonian Commercial Vessel), LAT?

Within the gear field the following positions have been reserved for recording various types of rigging:

Positions 14–16: Sweep length in m. (Numeric, right justified, zero filled. Spaces for unknown. Code 000 indicates the semi-pelagic rigging; this specification is associated with the GOV.)

Position 17: Exceptions (B=Bobbins used, D=Double sweeps, space=standard or not known).

Position 18: Door type (P=Polyvalent, V=Vee F=Flat, K=Karm Waco, space=others or not known).

Further quantitative numeric information on rigging of gear is defined in positions 74–95, in Record Type HH.

NB: This code must still be considered as a preliminary one. More detailed information on the gears used in the past is required before a completely comprehensive coding system can be developed.

Annex 10: Recorded species codes used in Record Type HH

NODC and TSN species codes are given in **Annex 12.**

NB: Zero catches of a particular species in a haul may be included in or excluded from the file. However, any species deliberately excluded from a subset, or an invalid species for a particular haul, should be included for each haul with a species validity code 0 !!.

RECORDED STANDARD SPECIES LIST CODES (POSITION 65)

1 = All (4) standard species recorded
3 = Bottom (2) standard species recorded 1)
4 = Individual (1) standard species recorded 2)

RECORDED BYCATCH SPECIES LIST CODES (POSITION 66)

1 = Open ended bycatch list - All species recorded
4 = Closed bycatch list - Only flatfish (4) species recorded 1)

1) For definition see Annex 11.

2) If this code is applied, zero catches of the species recorded must be recorded in Record Type 2 format.

Annex 11: Species validity code

0 =	INVALID INFORMATION	Information lost. A note should be given with the cause for the classification as invalid.
1 =	VALID INFORMATION	No per hour and total length composition recorded; applies also when No per hour is zero.
4 =	TOTAL NO PER HOUR ONLY	Catch sampled for No per hour only; no length measurements.

Annex 12: Species names, TSN and NOCD codes and maximum-recorded length of fish species, used in the DATRAS checking program

TSN code	NODC code	Latin name	English name	Max. length [cm]
161722	8747010201	*Clupea harengus*	Herring	40
161789	8747011701	*Sprattus sprattus*	Sprat	17
161716	8747010109	*Alosa fallax*	Twaite shad	50
161831	8747020104	*Engraulis encrasicolus*	European anchovy	25
161997	8755010306	*Salmo trutta*	Sea trout	95
161989	8755010211	*Oncorhynchus mykiss*	Rainbow trout	50
161950	8755010115	*Coregonus lavaretus*	Whitefish = powan	65
162039	8755030301	*Osmerus eperlanus*	Smelt	29
162139	8758010101	*Esox lucius*	Pike	120
164712	8791030402	*Gadus morhua*	Cod	135
164748	8791031501	*Enchelyopus cimbrius*	Fourbeard rockling	40
164758	8791031801	*Merlangius merlangus*	Whiting	60
172894	8857041402	*Platichthys flesus*	Flounder	52
172902	8857041502	*Pleuronectes platessa*	Plaice	57
172881	8857040904	*Limanda limanda*	Common dab	40
616195 or 172748	8857030402	*Psetta maxima*	Turbot	60
168510	8835200403	*Stizostedion lucioperca*	Pikeperch/Zander	85
168470	8835200202	*Perca fluviatilis*	Perch	40
168520	8835200601	*Gymnocephalus cernua*	Ruffe	15
171645	8842130209	*Pholis gunnellus*	Butterfish	20
631023 or 171588	8842120905	*Lumpenus lampretaeformis*	Serpent blenny= snakeblenny	35
165324	8793012001	*Zoarces viviparus*	Viviporous eelpout	40
171676	8845010105	*Ammodytes tobianus*	Lesser sandeel	20
171682	8845010301	*Hyperoplus lanceolatus*	Greater sandeel	35
172414	8850030302	*Scomber scombrus*	Mackerel	65
168588	8835280103	*Trachurus trachurus*	Horse mackerel	45
172072	8847017505	*Neogobius melanostomus*	Round goby	20
167318	8831022207	*Myoxocephalus scorpius*	Sea scorpion = Shorthorn sculpin	25
167454	8831080803	*Agonus cataphractus*	Pogge	20
167612	8831091501	*Cyclopterus lumpus*	Lumpfish	35
167578	8831090828	*Liparis liparis*	Sea snail	10
166365	8818010101	*Gasterosteus aculeatus*	Threespine stickleback	8
163666	8776014901	*Abramis brama*	Bream	60
639696	8776010601	*Vimba vimba*	vimba	40
163761	8776017401	*Rutilus rutilus*	Roach	30
161128	8741010102	*Anguilla anguilla*	Eel	180
159722	8603010301	*Petromyzon marinus*	Sea lamprey	90
159719	8603010217	*Lampetra fluviatilis*	River lamprey	65

Note: the information set concerns the name of fish species orders was deleted from the Annex 12, because the DATRAS scanning program does not accept the name of order instead of name of species. Moreover, the Latin name of some fish occurred in the Baltic Sea, which are marked in red (see Annex 12), are not listed on the ICES Data Centre web page: http://dome.ices.dk/datsu/rptSpc.aspx?Dataset= and due to this fact, the DATRAS database manager is requested to solve occurred discrepancy.